Volvo Construction Equipment
Building Tomorrow

ECR355E

Volvo Crawler Excavators 34.1-38.0 t 245 hp

A passion for performance

At Volvo Construction Equipment, we're not just coming along for the ride. Developing products and services that raise productivity – we are confident we can lower costs and increase profits for industry experts. Part of the Volvo Group, we are passionate about innovative solutions to help you work smarter – not harder.

Helping you to do more

Doing more with less is a trademark of Volvo Construction Equipment. High productivity has long been married to low energy consumption, ease of use and durability. When it comes to lowering life-cycle costs, Volvo is in a class of its own.

Designed to fit your needs

There is a lot riding on creating solutions that are suited to the particular needs of different industry applications. Innovation often involves high technology – but it doesn't always have to. Some of our best ideas have been simple, based on a clear and deep understanding of our customers' working lives.

You learn a lot in 180 years

Over the years, Volvo has advanced solutions that have revolutionized the use of construction equipment. No other name speaks Safety louder than Volvo. Protecting operators, those around them and minimizing our environmental impact are traditional values that continue to shape our product design philosophy.

We're on your side

We back the Volvo brand with the best people. Volvo is truly a global enterprise, one that is on standby to support customers quickly and efficiently – wherever they are.

We have a passion for performance.

Volvo Trucks

Renault Trucks

Mack Trucks

UD Trucks

Volvo Buses

Volvo Construction Equipment

Volvo Penta

Volvo Financial Services

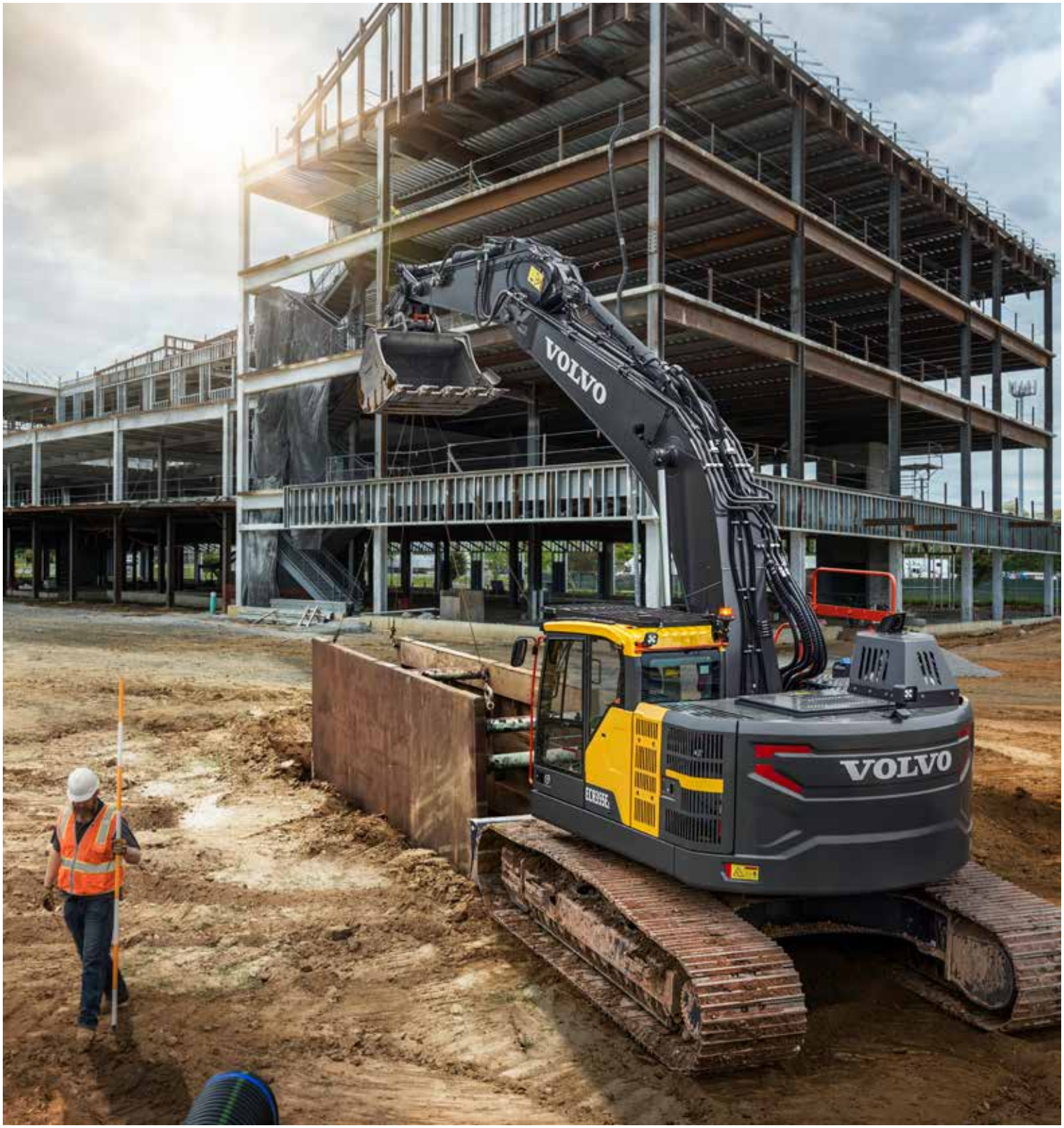

SHORT SWING, SOLID STABILITY

Operate with complete confidence with the ECR355E. The heavy-duty, short swing machine provides unshakable stability, enabling you to gain the most from the power. The solid design features precisely positioned components for optimal balance, as well as an optional dozer blade that can be used to level the excavator when working on uneven ground and for faster clean-ups.

Never short on performance

Proving that you don’t need to make compromises, the new ECR355E short swing radius excavator from Volvo is designed for working in confined areas – while delivering digging performance, fast cycle times, balance and stability that rival conventional excavators. Get to work without delay in the robust machine, powered by the fuel-efficient Stage V certificated Volvo engine and do more for less.

The right mode for the job

Keep performance high and costs low with the integrated Volvo work mode system. Choose the best work mode for the task at hand – select from I (Idle), F (Fine), G (General), H (Heavy) and P (Power max). The new ECO mode uses the latest electronic pump control technology to further boost fuel efficiency without any loss in performance.

Power to perform

Power your operation with the fuel-efficient Stage V certificated Volvo engine, combining high torque and low RPM for superior, long-lasting performance. Based on proven, advanced technology and decades of experience, the robust D8 engine delivers 180kW (241 Hp) of power, while reducing both fuel consumption and emissions.

Get to work – fast

Cut cycle times to a minimum and increase profitability with the E-Series electro-hydraulic system. Working in combination with the Volvo engine, the advanced system increases pump power for faster and smoother operation, all while providing greater control, superior digging performance and unbeatable productivity.

Do more for less

Increase fuel efficiency by up to 10% with the ECR355E, designed to help you do more for less. ECO Mode, combined with the efficient Stage V certificated Volvo engine and superior hydraulic performance at lower engine RPM – results in improved fuel efficiency without any loss of performance in most operating conditions. Cut cycle times thanks to the boom float function, which saves pump power when lowering the boom.

Short swing, big potential

No task is too tough for the robust and versatile ECR355E. The short swing radius machine is a proven partner to increase productivity on tight job sites. Combining superior digging performance, greater lifting capacity, ease of mobility and a precise finish in grading applications, the ECR355E is a compact machine that packs a powerful punch.

Adapt to any application

From road construction to heavy infrastructure work, the ECR355E's class-leading short swing radius goes where conventional machines cannot. Add the Volvo dozer blade, quick coupler, auxiliary hydraulics or the optional two-piece boom, and the result is greater versatility and productivity. Adapt to any application with the ECR355E without compromising on reach, lifting or digging performance.

Go anywhere ability

Go everywhere in the ECR355E, designed to deliver maximum mobility, performance and power for its size. Thanks to its compact design, the machine is ideal for working in confined spaces and can easily be transported from site to site. And with the optional narrow and long undercarriage, mobility is further enhanced between job sites.

Productivity Services

Improve and maintain site productivity with a host of smart solutions offered by Productivity Services. Operator behavior, site setup and machine configuration are just some of the many factors within Productivity Services that can be refined to boost productivity. Choose from various machine options, Assist solutions and training packages to enhance the performance of your Volvo fleet – so you can do more and earn more.

Making the grade

Experience smooth operation, fast response times and high performance with the ECR355E, featuring increased hydraulic flow for accurate control in grading and combined operations. Benefit from easier movement when traveling and lifting simultaneously, and better grading quality thanks to the synchronized boom and arm movement. Designed to complement each other, the enhancements also contribute to low fuel consumption.

LIFT MORE, DIG MORE

Dig, swing and load more than before with the ECR355E, powered by advanced electro-hydraulic technology. Offering a significant increase in both lifting capacity and digging force this machine is ideal for pipelaying, trench-box installation and utility work. With the ECR355E, hard work has never been so easy.

UP TO THE TEST

Built on the established E-Series platform, the ECR355E features all the proven Volvo technology you'd expect from a short swing radius excavator, plus a host of upgrades. Durable by design, the ECR355E has undergone extensive testing to ensure the highest standard of productivity and machine uptime.

Take on the tough stuff

Always available and ready to work, the ECR355E knocks big jobs down to size. This robust machine delivers ultimate uptime across a variety of applications – no matter how demanding – thanks to its sturdy design, reliable and wear-resistant components, reinforced undercarriage and easy service access.

Durable by design

Achieve non-stop production with the durable and reliable ECR355E. Built with robust components, including a strong X-frame undercarriage featuring forged steel top rollers, and Volvo's rugged boom and arms, the machine can be relied on for longevity and sustained uptime.

Uptime Services

Reduce repair costs and unplanned downtime with Uptime Services, designed to help keep your machine and business up and running. Utilizing innovative technology, Volvo dealers remotely monitor your machine. Any problems can be diagnosed early and corrective steps taken towards a sustainable solution. Stay on track with the latest software, planned servicing, flexible maintenance and repair options.

Simple serviceability

Maximize uptime with quick and safe ground-level servicing. Essential maintenance points – including pump pressure taps, filters and the cooling package – are easily accessed via the wide-opening compartment doors, which can be latched at 90°. And, with logically-grouped greasing manifolds, anti-slip plates and plentiful handrails, you can get back to work swiftly and safely.

Heavy-duty options

For demolition and other heavy-duty applications, Volvo offers reinforcement and guarding packages to ensure your Volvo machine is well-protected. Unlock the potential of your ECR355E's uptime with a range of options, including the boom and bucket cylinder guards, heavy-duty side doors, reinforced undercovers, slew ring protection and cab-mounted Falling Object Guarding (FOG) packages.

Get up close and personal

TAKE CONTROL

Flow sharing hydraulics ensure smooth, precise control of simultaneous functions for more efficient operations.

Get to work – fast

Do more in less time thanks to the hydraulics system, designed to work in harmony with the engine for fast cycle times.

Adapt to any application

Adjust to any application with the ECR355E without compromising on reach, lifting or digging performance.

LIFT MORE, DIG MORE

Offering an increase in both lifting capacity and digging force, the ECR355E is ideal for pipelaying, trench-box installation and utility works.

Comfortably productive

The newly designed E-Series ROPS certificated Volvo cab has improved all-around visibility, more space and ergonomic controls.

MIX AND MATCH

Volvo's durable attachments have been purpose-built to deliver maximum productivity and long service life in combination with Volvo machines.

UP TO THE TEST

Built to last, the undercarriage features a strong X-frame structure, forged steel top rollers, sealed track link and reinforced track guard.

Every angle in view

For a clear view of your job site, the cab's slim pillars and large expanses of glass result in excellent all-around visibility.

SHORT SWING, SOLID STABILITY

The excavator features precisely positioned components for optimal balance, as well as an optional dozer blade.

Simple serviceability

Anti-slip plates, handrails, wide steps and large compartment doors provide easy and safe access to all checkpoints.

Power to perform

Rely on a top performance from the ECR355E, featuring a powerful Volvo D8 engine for fast and efficient operation.

Do more for less

Boost fuel efficiency by up to 10% with ECO Mode, the Volvo engine and superior hydraulic performance at lower engine RPM.

TAKE CONTROL

Take control of your machine with a host of new features. The customized response modes in the joysticks and the positive control hydraulic system deliver equal measures power and precision, the machine does exactly what the operator intends to optimize productivity and performance. The hydraulic system is matched to the Volvo D8 engine, further enhancing the power and controllability of the excavator

Do more – comfortably

Get comfortable with doing more in the Volvo ECR355E. The new E-Series is designed to maneuver in and out of confined areas, yet remains spacious and comfortable. The low-noise cab increases efficiencies and reduces operator fatigue thanks to a number of features, including the automatic climate control system. Do more with Volvo – because a comfortable operator is a more productive operator.

Comfortably productive

Comfort is key. The industry-leading ROPS certified Volvo cab's expansive window area offers unparalleled visibility. The adjustable seat, ample legroom and vibration dampeners deliver superior comfort and productivity. With ergonomic controls and simplified switches integrated into the keypad, the Human Machine Interface (HMI) brings the operator and technology together, forming one cohesive working environment.

Every angle in view

From the Volvo cab, experience all-around visibility around the machine and surrounding job site thanks to narrow pillars and large windows. The ergonomically designed cab also features a large vertical windshield for greater visibility, safety and convenience – the large upper front window can be easily rolled up and out of the way, while the lower portion can be easily removed and stowed inside the cab.

Volvo Smart View

Enhance performance and safety with Volvo Smart View. The optional feature combines four exterior-mounted cameras to create a bird's eye view of the machine, displayed via the on-board monitor. With Volvo Smart View, you can observe all surrounding areas, which is particularly valuable in confined spaces where an extra pair of eyes informs you of the machine's position in relation to the job at all times.

Keep cool

Stay fresh, alert and focused with the E-Series climate control system. The industry-leading air circulation and defrosting system speeds up the heating and cooling of the cab for a more comfortable environment. Easily adjust the system from the 8" LCD monitor.

More than a machine

Complete a variety of tasks with the versatile ECR355E, designed to work in harmony with integrated attachments from Volvo. With Volvo's quick couplers and attachment management system, you can easily switch between buckets, hydraulic breakers, and even the Steelwrist® tilt rotator. Maximize cycle times and productivity with the Volvo short swing radius excavator – more than just a machine.

Tilt rotators

Volvo's tilt rotator can be ordered factory-installed with dedicated joysticks and a color display that is fully integrated into the machine's system. The new series of Volvo Aggressive Cut excavator buckets are perfectly matched to the factory-installed tilt rotator.

Locked on

Volvo offers a full range of quick couplers, which includes Volvo's S-type, universal and Steelwrist® quick coupler. Offering smooth transitions and quick attachment changes, Volvo's quick couplers make changing attachments quick and easy – all from the comfort and safety of the cab.

Auxiliary piping

To achieve the correct flow and pressure for hydraulic attachments such as mowers, grinders, shears, crushers and tilt rotators, the machine can be factory fitted with a variety of extra hydraulic lines, such as breaker and shear piping, as well as rotator piping.

Get set and go

The password protected attachment management system allows storage for up to 20 different attachments. The user-friendly system allows the operator to pre-set the correct hydraulic flow and pressure inside the cab through the monitor, to get the most performance from attachments.

MIX AND MATCH

Get the most out of your machine with Volvo attachments. Choose from a selection of purpose-built attachments, including the hydraulic breakers, general-purpose buckets, heavy-duty buckets and hydraulic thumbs. Or, utilize the attachment management system with optional pressure settings to install a number of aftermarket work tools to give your machine unrestricted access to more applications.

Volvo ECR355E in detail

Engine

The latest generation, Volvo engine Stage V emissions certificated diesel engine fully meets the demands of the latest, emsissions regulations. Featuring Volvo Advanced Combustion Technology (V-ACT), it is designed to deliver superior performance and fuel efficiency. The engine uses precise, high pressure fuel injectors, turbo charger and air-to-air intercooler, and electronic engine controls to optimize machine performance.
- Air Filter: 3-stage with precleaner
- Automatic Idling System: Reduces engine speed to idle when the levers and pedals are not activated resulting in less fuel consumption and low cab noise levels.

Engine	Volvo	D8J
Max power at	r/min	1 800
Net, ISO 9249/SAE J1349	kW	179
	hp	243
Gross, ISO 14396/SAE J1995	kW	180
	hp	245
Max torque	Nm	1 238
at engine speed	r/min	1 350
No. of cylinders		6
Displacement	l	7.8
Bore	mm	110
Stroke	mm	136

Electrical system

Well protected high-capacity electrical system. Waterproof double-lock harness plugs are used to secure corrosion-free connections. The main relays and solenoid valves are shielded to prevent damage. The master switch is standard. Contronics provides advanced monitoring of machine functions and important diagnostic information.

Voltage	V	24
Batteries	V	2 x 12
Battery capacity	Ah	170
Alternator	V/A	28/120
Start motor	V - kW	24 - 5.5

Undercarriage

Robust X-shaped frame with greased and sealed track chains as standard

		ECR355EL
Track shoe		2 x 48
Link pitch	mm	215.9
Shoe width, triple grouser	mm	600 / 700 / 800 /850
Shoe width, double grouser	mm	600
Bottom rollers		2 x 8
Top rollers		2 x 2

		ECR355ENL
Track shoe		2 x 48
Link pitch	mm	215.9
Shoe width, triple grouser	mm	600 / 700 / 800 /850
Shoe width, double grouser	mm	600
Bottom rollers		2 x 8
Top rollers		2 x 2

Swing system

The swing system uses an axial piston motors, driving a planetary gearbox for maximum torque. An automatic holding brake and antirebound valve are standard

Max. slew speed	r/min	10.2
Max. slew torque	kNm	117.6

Travel System

Each track is powered by an automatic two-speed shift travel motor. The track brakes are multi-disc, spring-applied and hydraulic released. The travel motor, brake and planetary gears are well protected within the track frame.

Max. drawbar pull	kN	275
Max. travel speed (low)	km/h	3
Max. travel speed (high)	km/h	4.5
Gradeability	°	35

Hydraulic system

The hydraulics system, combined with the fully electronic control system and advanced ECO mode, has been optimized to work in harmony with engine to match the engine power, reduce power loss and improve controllability and response time.
The following important functions are included in the system:
Summation system: Combines the flow of both hydraulic pumps to ensure quick cycle times and high productivity.
Boom priority: Gives priority to the boom operation for faster raising when loading or performing deep excavations.
Arm priority: Gives priority to the arm operation for faster cycle times in leveling and for increased bucket filling when digging.
Swing priority: Gives priority to swing functions for faster simultaneous operations.
Regeneration system: Prevents cavitation and provides flow to other movements during simultaneous operations for maximum productivity.
Power boost: All digging and lifting forces are increased.
Holding valves: Boom and arm holding valves prevent the digging equipment from creeping.

Main pump. Type: 2 x Variable displacement axial piston pumps		
Maximum flow	l/min	2 x 263
Pilot pump. Type: Gear pump		
Maximum flow	l/min	1 x 18
Relief value setting pressure		
Implement	MPa	33.3 / 36.3
Travel circuit	MPa	36.3
Slew circuit	MPa	27.5
Pilot circuit	MPa	3.9

Hydraulic Cylinders

Mono boom		2
Bore x Stroke	ø x mm	140 x 1 511
1st boom of 2-piece boom		2
Bore x Stroke	ø x mm	140 x 1 460
2nd boom of 2-piece boom		1
Bore x Stroke	ø x mm	170 x 1 300
Arm		1
Bore x Stroke	ø x mm	150 x 1 745
Bucket		1
Bore x Stroke	ø x mm	140 x 1 140
Dozer blade		2
Bore x Stroke	ø x mm	165 x 385

Service Refill

Fuel tank	l	348
DEF/AdBlue® tank	l	31
Hydraulic system, total	l	370
Hydraulic tank	l	243
Engine oil	l	32
Engine coolant	l	36
Slew reduction unit	l	6.1
Travel reduction unit	l	2 x 6.8

Cab

The operator's cab has easy access via a wide door opening. The cab is supported on hydraulic dampening mounts to reduce shock and vibration levels. These along with sound absorbing lining provide low noise levels. The cab has excellent all-round visibility. The front windshield can easily slide up into the ceiling, and the lower front glass can be removed and stored in the RH side of cab inner space.
Integrated air-conditioning and heating system:The pressurized and filtered cab air is supplied by an automatically controlled fan. The air is distributed throughout the cab from 8 vents.
Ergonomic operator's seat: The adjustable seat and joystick console move independently to accommodate the operator. The seat has 12 different adjustments plus a seat belt for the operator's comfort and safety.
Refrigerant of the type R134a is used when this machine is equipped with air conditioning. Contains fluorinated greenhouse gas R134a, Global Warming Potential 1.430 t CO2-eq.

Sound Level

Sound pressure level in cab according to ISO 6396		
L_{pA} (standard)	dB	72
L_{pA} (tropical)	dB	72
External sound level according to ISO 6395 and EU Noise Directive 2000/14/EC		
L_{WA} (standard)	dB	104
L_{WA} (tropical)	dB	105

Specifications

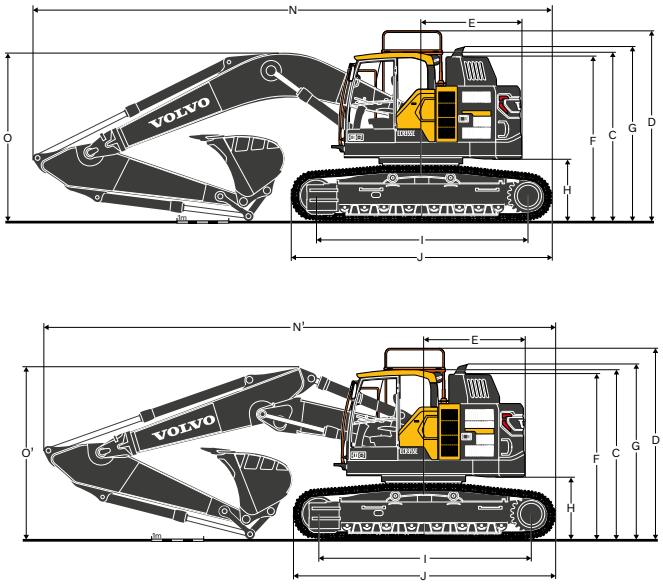

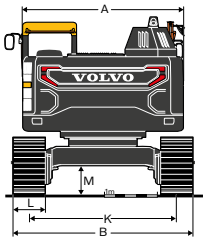

DIMENSIONS

Description	Unit	ECR355EL			ECR355ENL		
Boom		6.2 m mono boom or 6.2 m 2-piece boom					
Arm	**m**	**2.55**	**3.05**	**3.7**	**2.55**	**3.05**	**3.7**
A. Overall width of upper structure	mm	2 990	2 990	2 990	2 990	2 990	2 990
B. Overall width	mm	3 340	3 340	3 340	2 990	2 990	2 990
C. Overall height of cab	mm	3 200	3 200	3 200	3 200	3 200	3 200
D. Overall height of guardrail (Unfolded)	mm	3 615	3 615	3 615	3 615	3 615	3 615
E. Tail swing radius	mm	1 900	1 900	1 900	1 900	1 900	1 900
F. Overall height of engine hood	mm	3 110	3 110	3 110	3 110	3 110	3 110
G. Overall height of diffuser	mm	3 300	3 300	3 300	3 300	3 300	3 300
H. Counterweight clearance *	mm	1 160	1 160	1 160	1 160	1 160	1 160
I. Tumbler length	mm	4 020	4 020	4 020	4 020	4 020	4 020
J. Track length	mm	4 946	4 946	4 946	4 946	4 946	4 946
K. Track gauge	mm	2 740	2 740	2 740	2 390	2 390	2 390
L. Shoe width	mm	600	600	600	600	600	600
M. Min. ground clearance *	mm	500	500	500	500	500	500
N. Overall length	mm	9 950	9 865	9 890	9 950	9 865	9 890
N'. Overall length	mm	9 948	9 883	9 878	9 948	9 883	9 878
O. Overall height of boom	mm	3 445	3 305	3 550	3 445	3 305	3 550
O'. Overall height of boom	mm	3 355	3 300	3 530	3 355	3 300	3 530

2piece boom
* Without shoe grouser

DIMENSIONS / Boom and arm

		Boom		Arm		
Description	**Unit**	**HD**	**2-piece**	**HD**	**HD**	**GP**
	m	**6.2**	**6.2**	**2.55**	**3.05**	**3.7**
A. Length	mm	6 430	6 427	3 710	4 150	4 900
B. Height	mm	1 680	1 490	1 010	1 010	1 050
Width	mm	770	770	545	545	545
Weight	kg	2 480	2 808	1 475	1 540	1 680

Boom: Includes cylinder, piping and pin, excludes boom cyl. Pin
Arm: Includes cylinder, linkage and pin

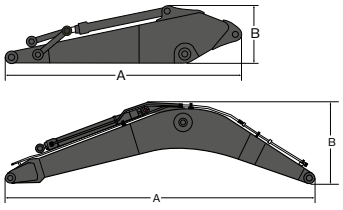

DIMENSIONS / Dozer blade

	Unit	ECR355EL	ECR355ENL
A. Height	mm	744	744
Width Dozer Blade	mm	3 340	2 990
Weight	kg	1 985	1 946
B. Lift height	mm	623	623
C. Digging depth	mm	668	668

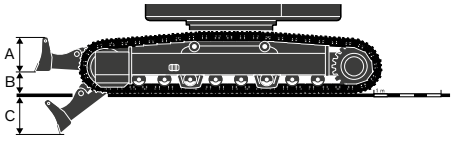

Specifications

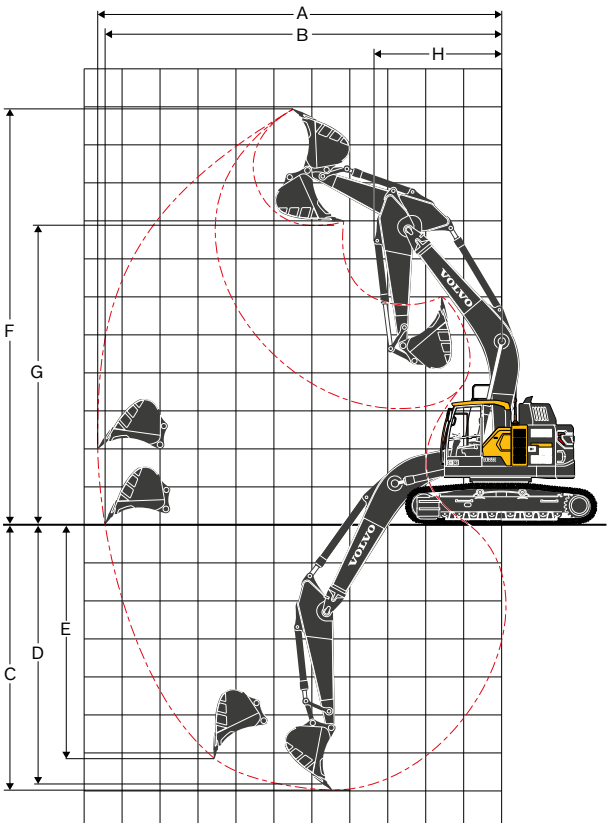

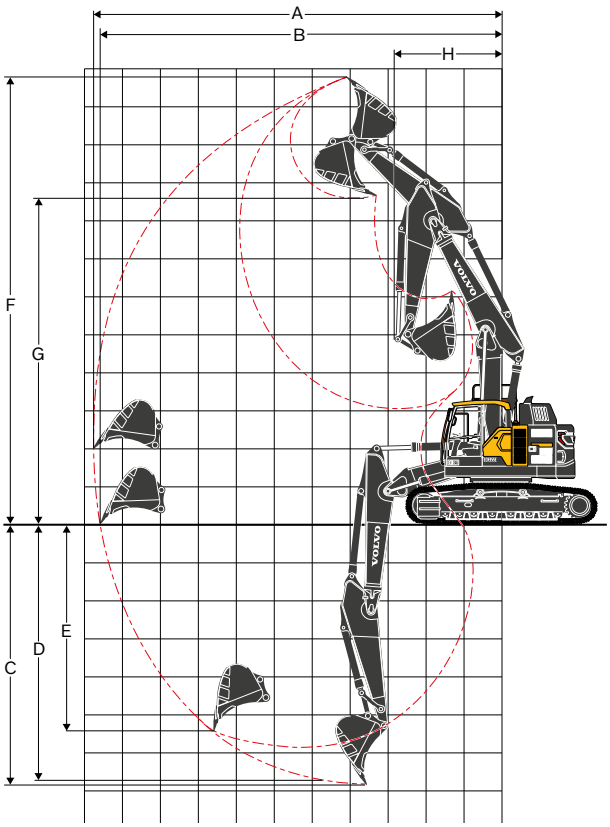

WORKING RANGES

Description			Unit	ECR355E					
Boom				6.2 m mono boom			6.2 m 2-piece boom		
Arm			m	2.55	3.05	3.7	2.55	3.05	3.7
A. Max. digging reach			mm	10 110	10 635	11 240	10 211	10 741	11 356
B. Max. digging reach on ground			mm	9 905	10 445	11 065	10 009	10 550	11 175
C. Max. digging depth			mm	6 460	6 960	7 610	6 293	6 818	7 460
D. Max.digging depth (I=2440 m level)			mm	6 260	6 795	7 465	6 190	6 721	7 370
E. Max. vertical wall digging depth			mm	5 600	6 130	6 755	4 796	5 384	5 974
F. Max. cutting height			mm	10 455	10 915	11 285	11 268	11 773	12 240
G. Max. dumping height			mm	7 435	7 855	8 230	8 101	8 577	9 046
H. Min. front swing radius			mm	3 285	3 365	3 340	2 988	2 747	2 913
DIGGING FORCES WITH DIRECT FIT BUCKET									
Bucket capacity			l	1 270	1 270	1 270	1 270	1 270	1 270
Breakout force (bucket)	Normal	SAE J1179	kN	165	165	165	165	165	165
	Power boost	SAE J1179	kN	179	179	179	179	179	179
	Normal	ISO 6015	kN	192	192	192	192	192	192
	Power boost	ISO 6015	kN	209	209	209	209	209	209
Tearout force (arm)	Normal	SAE J1179	kN	148.9	133.0	116.8	148.9	133.0	116.8
	Power boost	SAE J1179	kN	161.2	144.0	126.4	161.2	144.0	126.4
	Normal	ISO 6015	kN	152.3	136.0	119.4	152.3	136.0	119.4
	Power boost	ISO 6015	kN	165.7	148.0	129.9	165.7	148.0	129.9
Rotation angle, bucket			deg	179	179	179	179	179	179

MACHINE WEIGHTS AND GROUND PRESSURE - ECR355EL

Description	Shoe width	Operating weight	Ground pressure	Overall width	Operating weight	Ground pressure	Overall width
	mm	kg	kPa	mm	kg	kPa	mm
		6.2 m mono boom, 2.55 m arm, 1.27 m³ bucket, 8 450 kg counterweight			**6.2 m mono boom, 2.55 m arm, 1.27 m³ bucket, 8 450 kg counterweight, with dozer blade**		
Triple grouser	600	34 152	63.7	3 340	36 551	68.6	3 340
	700	34 777	55.9	3 440	37 176	59.8	3 440
	800	35 165	50.0	3 540	37 564	53.0	3 540
	850	35 348	47.1	3 590	37 747	50.0	3 590
Double grouser	600	34 850	65.7	3 340	37 249	69.6	3 340
		6.2 m 2-piece boom, 2.55 m arm, 1.27 m³ bucket, 8 450 kg counterweight			**6.2 m 2-piece boom, 2.55 m arm, 1.27 m³ bucket, 8 450 kg counterweight, with dozer blade**		
Triple grouser	600	34 512	64.7	3 340	36 911	69.6	3 340
	700	35 137	56.9	3 440	37 536	60.8	3 440
	800	35 525	50.0	3 540	37 924	53.9	3 540
	850	35 708	47.1	3 590	38 107	51.0	3 590
Double grouser	600	35 210	65.7	3 340	37 609	70.6	3 340
		6.2 m mono boom, 3.05 m arm, 1.27 m³ bucket, 8 450 kg counterweight			**6.2 m mono boom, 3.05 m arm, 1.27 m³ bucket, 8 450 kg counterweight, with dozer blade**		
Triple grouser	600	34 210	64.7	3 340	36 609	68.6	3 340
	700	34 835	55.9	3 440	37 234	59.8	3 440
	800	35 223	50.0	3 540	37 622	53.0	3 540
	850	35 406	47.1	3 590	37 805	50.0	3 590
Double grouser	600	34 908	65.7	3 340	37 307	69.6	3 340
		6.2 m 2-piece boom, 3.05 m arm, 1.27 m³ bucket, 8 450 kg counterweight			**6.2 m 2-piece boom, 3.05 m arm, 1.27 m³ bucket, 8 450 kg counterweight, with dozer blade**		
Triple grouser	600	34 570	64.7	3 340	36 969	69.6	3 340
	700	35 195	56.9	3 440	37 594	60.8	3 440
	800	35 583	50.0	3 540	37 982	53.9	3 540
	850	35 766	47.1	3 590	38 165	51.0	3 590
Double grouser	600	35 268	66.7	3 340	37 667	70.6	3 340
		6.2 m mono boom, 3.7 m arm, 1.27 m³ bucket, 8 450 kg counterweight			**6.2 m mono boom, 3.7 m arm, 1.27 m³ bucket, 8 450 kg counterweight, with dozer blade**		
Triple grouser	600	34 083	63.7	3 340	36 482	68.6	3 340
	700	34 708	55.9	3 440	37 107	59.8	3 440
	800	35 096	49.0	3 540	37 495	53.0	3 540
	850	35 279	47.1	3 590	37 678	50.0	3 590
Double grouser	600	34 781	65.7	3 340	37 180	69.6	3 340
		6.2 m 2-piece boom, 3.7 m arm, 1.27 m³ bucket, 8 450 kg counterweight			**6.2 m 2-piece boom, 3.7 m arm, 1.27 m³ bucket, 8 450 kg counterweight, with dozer blade**		
Triple grouser	600	34 443	64.7	3 340	36 842	69.6	3 340
	700	35 068	56.9	3 440	37 467	60.8	3 440
	800	35 456	50.0	3 540	37 855	53.0	3 540
	850	35 639	47.1	3 590	38 038	50.0	3 590
Double grouser	600	35 141	65.7	3 340	37 540	70.6	3 340

MACHINE WEIGHTS AND GROUND PRESSURE - ECR355ENL

Description	Shoe width	Operating weight	Ground pressure	Overall width	Operating weight	Ground pressure	Overall width
	mm	kg	kPa	mm	kg	kPa	mm
		6.2 m mono boom, 2.55 m arm, 1.27 m³ bucket, 8 450 kg counterweight, with dozer blade			**6.2 m 2-piece boom, 2.55 m arm, 1.27 m³ bucket, 8 450 kg counterweight, with dozer blade**		
Triple grouser	600	36 419	68.6	2 990	36 779	68.6	2 990
	700	37 044	59.8	3 090	37 404	59.8	3 090
	800	37 432	53.0	3 190	37 792	53.0	3 190
	850	37 615	50.0	3 240	37 975	50.0	3 240
Double grouser	600	37 117	69.6	2 990	37 477	70.6	2 990
		6.2 m mono boom, 3.05 m arm, 1.27 m³ bucket, 8 450 kg counterweight, with dozer blade			**6.2 m 2-piece boom, 3.05 m arm, 1.27 m³ bucket, 8 450 kg counterweight, with dozer blade**		
Triple grouser	600	36 477	68.6	2 990	36 837	69.6	2 990
	700	37 102	59.8	3 090	37 462	60.8	3 090
	800	37 490	53.0	3 190	37 850	53.0	3 190
	850	37 673	50.0	3 240	38 033	50.0	3 240
Double grouser	600	37 175	69.6	2 990	37 535	70.6	2 990
		6.2 m mono boom, 3.7 m arm, 1.27 m³ bucket, 8 450 kg counterweight, with dozer blade			**6.2 m 2-piece boom, 3.7 m arm, 1.27 m³ bucket, 8 450 kg counterweight, with dozer blade**		
Triple grouser	600	36 350	68.6	2 990	36 710	68.6	2 990
	700	36 975	59.8	3 090	37 335	59.8	3 090
	800	37 363	53.0	3 190	37 723	53.0	3 190
	850	37 546	50.0	3 240	37 906	50.0	3 240
Double grouser	600	37 048	69.6	2 990	37 408	70.6	2 990

Specifications

BUCKET SELECTION GUIDE

Bucket type			Capacity	Cutting width	Weight	Teeth	ECR355EL, 600 mm shoe, 8 450 kg counterweight, without dozer blade						ECR355EL, 600 mm shoe, 8 450 kg counterweight, with dozer blade						ECR355ENL, 600 mm shoe, 8 450 kg counterweight, with dozer blade					
							6.2m HD boom			6.2m 2-piece boom			6.2m HD boom			6.2m 2-piece boom			6.2m HD boom			6.2m 2-piece boom		
			m³	mm	kg	EA	2.55 m arm	3.05 m arm	3.70 m arm	2.55 m arm	3.05 m arm	3.70 m arm	2.55 m arm	3.05 m arm	3.70 m arm	2.55 m arm	3.05 m arm	3.70 m arm	2.55 m arm	3.05 m arm	3.70 m arm	2.55 m arm	3.05 m arm	3.70 m arm
Direct fit Buckets	Without Quick Coupler	General purpose	0.95	1 500	796	-	B	B	B	B	B	B	B	B	B	B	B	B	B	B	B	B	B	B
			1.03	1 600	835	-	B	B	B	B	B	B	B	B	B	B	B	B	B	B	B	B	B	B
			0.55	600	881	3	C	C	C	C	C	C	C	C	C	C	C	C	C	C	C	C	C	C
			0.66	750	928	3	C	C	C	C	C	C	C	C	C	C	C	C	C	C	C	C	C	C
			0.77	900	996	4	C	C	C	C	C	C	C	C	C	C	C	C	C	C	C	C	C	C
			0.95	1 050	1 018	4	C	C	C	C	C	C	C	C	C	C	C	C	C	C	C	C	C	C
			1.14	1 200	1 187	5	C	C	C	C	C	C	C	C	C	C	C	C	C	C	C	C	C	C
			1.27	1 310	1 191	5	C	C	C	C	C	C	C	C	C	C	C	C	C	C	C	C	C	C
			1.32	1 350	1 267	5	C	C	C	C	C	C	C	C	C	C	C	C	C	C	C	C	C	C
			1.45	1 450	1 263	5	C	C	C	C	C	C	C	C	C	C	C	C	C	C	C	C	C	C
			1.51	1 500	1 365	5	C	C	C	C	C	C	C	C	C	C	C	C	C	C	C	C	C	C
			1.76	1 700	1 448	6	C	C	C	C	C	B	C	C	C	C	C	C	C	C	C	C	C	C
			2.06	1 950	1 590	6	C	B	A	C	B	A	C	C	C	C	C	C	C	C	C	C	C	B
		Heavy Duty	0.66	750	1 000	3	D	D	D	D	D	D	D	D	D	D	D	D	D	D	D	D	D	D
			1.14	1 200	1 294	5	D	D	D	D	D	D	D	D	D	D	D	D	D	D	D	D	D	D
			1.32	1 350	1 381	5	D	D	D	D	D	D	D	D	D	D	D	D	D	D	D	D	D	D
			1.51	1 500	1 477	5	D	D	D	D	D	C	D	D	D	D	D	D	D	D	D	D	D	D

Maximum materal density

A	1200~1300 kg/m³	Coal, Caliche, Shale
B	1400~1600 kg/m³	Wet earth and clay, Limestone, Sandstone
C	1700~1800 kg/m³	Granite, Wet sand, Well blasted rock
D	1900 kg/m³ ~	Wet mud, Iron ore

LIFTING CAPACITY - ECR355EL

At the arm end without bucket.
For Lifting capacity including bucket. simply subtract actual weight of the direct fit bucket or the bucket with quick fit from the following values.
Unit: 1 000 kg.

		Lifting point	1.5 m		3 m		4.5 m		6.0 m		7.5 m		9.0 m		Max. reach		
			Along UC	Across UC	Along UC	Across UC	Along UC	Across UC	Along UC	Across UC	Along UC	Across UC	Along UC	Across UC	Along UC	Across UC	Max. m
Boom :	6.2 m	9.0 m	-	-	-	-	-	-	-	-	-	-	-	-	*9.20	*9.20	4.72
Arm :	2.55 m	7.5 m	-	-	-	-	-	-	*8.40	*8.40	-	-	-	-	*8.48	7.73	6.45
Shoe :	600 mm	6.0 m	-	-	-	-	*9.68	*9.68	*8.68	8.63	-	-	-	-	*8.33	5.98	7.49
L/Frame:	LC	4.5 m	-	-	-	-	*12.07	*12.07	*9.70	8.31	*8.59	5.88	-	-	7.88	5.15	8.13
		3.0 m	-	-	-	-	*15.01	12.06	*11.02	7.91	8.79	5.70	-	-	7.29	4.74	8.46
		1.5 m	-	-	-	-	*16.93	11.43	12.08	7.57	8.60	5.52	-	-	7.13	4.60	8.51
		0.0 m	-	-	-	-	*17.29	11.21	11.85	7.37	8.47	5.41	-	-	7.34	4.72	8.29
		-1.5 m	-	-	*12.21	*12.21	*16.61	11.21	11.79	7.31	8.45	5.39	-	-	8.04	5.15	7.77
		-3.0 m	-	-	*19.63	*19.63	*14.92	11.36	*11.36	7.40	-	-	-	-	*9.45	6.14	6.89
		-4.5 m	-	-	-	-	*11.53	*11.53	-	-	-	-	-	-	*9.20	8.77	5.47
Boom :	6.2 m	9.0 m	-	-	-	-	-	-	-	-	-	-	-	-	*6.84	*6.84	5.63
Arm :	3.05 m	7.5 m	-	-	-	-	-	-	*7.59	*7.59	-	-	-	-	*6.09	*6.09	7.13
Shoe :	600 mm	6.0 m	-	-	-	-	-	-	*8.00	*8.00	*7.69	6.08	-	-	*5.82	5.33	8.09
L/Frame:	LC	4.5 m	-	-	*15.71	*15.71	*11.00	*11.00	*9.08	8.42	*8.12	5.94	-	-	*5.81	4.66	8.68
		3.0 m	-	-	-	-	*13.99	12.31	*10.49	8.00	*8.80	5.74	-	-	*5.99	4.32	8.99
		1.5 m	-	-	-	-	*16.33	11.56	*11.77	7.62	8.62	5.54	6.55	4.23	*6.39	4.21	9.04
		0.0 m	-	-	-	-	*17.23	11.21	11.86	7.37	8.46	5.39	-	-	6.67	4.29	8.83
		-1.5 m	-	-	*11.23	*11.23	*16.95	11.14	11.74	7.27	8.39	5.33	-	-	7.22	4.62	8.35
		-3.0 m	-	-	*18.61	*18.61	*15.65	11.23	11.78	7.30	8.47	5.40	-	-	8.41	5.37	7.53
		-4.5 m	-	-	*17.33	*17.33	*12.94	11.51	*9.46	7.53	-	-	-	-	*8.77	7.10	6.27
Boom :	6.2 m	9.0 m	-	-	-	-	-	-	*6.60	*6.60	-	-	-	-	*5.25	*5.25	6.57
Arm :	3.70 m	7.5 m	-	-	-	-	-	-	-	-	*6.02	*6.02	-	-	*4.76	*4.76	7.89
Shoe :	600 mm	6.0 m	-	-	-	-	-	-	*7.07	*7.07	*6.92	6.17	-	-	*4.57	*4.57	8.77
L/Frame:	LC	4.5 m	-	-	-	-	*9.52	*9.52	*8.19	*8.19	*7.46	6.00	*6.01	4.43	*4.56	4.17	9.32
		3.0 m	-	-	-	-	*12.56	*12.56	*9.68	8.11	*8.23	5.77	6.66	4.33	*4.68	3.88	9.60
		1.5 m	-	-	-	-	*15.30	11.73	*11.13	7.67	8.63	5.54	6.54	4.21	*4.96	3.78	9.65
		0.0 m	-	-	*6.60	*6.60	*16.81	11.21	11.85	7.35	8.42	5.35	6.43	4.12	*5.44	3.83	9.45
		-1.5 m	*6.60	*6.60	*10.58	*10.58	*17.08	11.02	11.66	7.19	8.31	5.25	*6.27	4.08	*6.23	4.08	9.00
		-3.0 m	*11.07	*11.07	*15.95	*15.95	*16.29	11.04	11.63	7.16	8.31	5.24	-	-	7.26	4.62	8.26
		-4.5 m	-	-	*19.85	*19.85	*14.29	11.23	*10.69	7.29	-	-	-	-	*8.33	5.78	7.13
		-6.0 m	-	-	-	-	*10.05	*10.05	-	-	-	-	-	-	-	-	5.35
Boom :	6.2 m	9.0 m	-	-	-	-	-	-	-	-	-	-	-	-	*9.20	*9.20	4.72
Arm :	2.55 m	7.5 m	-	-	-	-	-	-	*8.40	*8.40	-	-	-	-	*8.48	8.33	6.45
Shoe :	600 mm	6.0 m	-	-	-	-	*9.68	*9.68	*8.68	*8.68	-	-	-	-	*8.33	6.48	7.49
L/Frame:	LC	4.5 m	-	-	-	-	*12.07	*12.07	*9.70	8.97	*8.59	6.37	-	-	*8.37	5.60	8.13
Dozer blade down		3.0 m	-	-	-	-	*15.01	13.04	*11.02	8.57	*9.18	6.19	-	-	*8.52	5.17	8.46
		1.5 m	-	-	-	-	*16.93	12.41	*12.15	8.23	*9.75	6.02	-	-	*8.74	5.03	8.51
		0.0 m	-	-	-	-	*17.29	12.19	*12.71	8.03	*10.04	5.90	-	-	*9.00	5.16	8.29
		-1.5 m	-	-	*12.21	*12.21	*16.61	12.19	*12.53	7.97	*9.74	5.88	-	-	*9.27	5.62	7.77
		-3.0 m	-	-	*19.63	*19.63	*14.92	12.35	*11.36	8.06	-	-	-	-	*9.45	6.69	6.89
		-4.5 m	-	-	-	-	*11.53	*11.53	-	-	-	-	-	-	*9.20	*9.20	5.47
Boom :	6.2 m	9.0 m	-	-	-	-	-	-	-	-	-	-	-	-	*6.84	*6.84	5.63
Arm :	3.05 m	7.5 m	-	-	-	-	-	-	*7.59	*7.59	-	-	-	-	*6.09	*6.09	7.13
Shoe :	600 mm	6.0 m	-	-	-	-	-	-	*8.00	*8.00	*7.69	6.57	-	-	*5.82	5.78	8.09
L/Frame:	LC	4.5 m	-	-	*15.71	*15.71	*11.00	*11.00	*9.08	9.08	*8.12	6.43	-	-	*5.81	5.08	8.68
Dozer blade down		3.0 m	-	-	-	-	*13.99	13.30	*10.49	8.66	*8.80	6.23	-	-	*5.99	4.72	8.99
		1.5 m	-	-	-	-	*16.33	12.54	*11.77	8.28	*9.48	6.03	*6.78	4.63	*6.39	4.60	9.04
		0.0 m	-	-	-	-	*17.23	12.20	*12.54	8.03	*9.92	5.88	-	-	*7.09	4.70	8.83
		-1.5 m	-	-	*11.23	*11.23	*16.95	12.12	*12.62	7.93	*9.89	5.82	-	-	*8.30	5.06	8.35
		-3.0 m	-	-	*18.61	*18.61	*15.65	12.22	*11.84	7.96	*8.89	5.89	-	-	*8.82	5.86	7.53
		-4.5 m	-	-	*17.33	*17.33	*12.94	12.49	*9.46	8.19	-	-	-	-	*8.77	7.73	6.27
Boom :	6.2 m	9.0 m	-	-	-	-	-	-	*6.60	*6.60	-	-	-	-	*5.25	*5.25	6.57
Arm :	3.70 m	7.5 m	-	-	-	-	-	-	-	-	*6.02	*6.02	-	-	*4.76	*4.76	7.89
Shoe :	600 mm	6.0 m	-	-	-	-	-	-	*7.07	*7.07	*6.92	6.67	-	-	*4.57	*4.57	8.77
L/Frame:	LC	4.5 m	-	-	-	-	*9.52	*9.52	*8.19	*8.19	*7.46	6.50	*6.01	4.83	*4.56	4.55	9.32
Dozer blade down		3.0 m	-	-	-	-	*12.56	*12.56	*9.68	8.77	*8.23	6.27	*7.41	4.73	*4.68	4.25	9.60
		1.5 m	-	-	-	-	*15.30	12.71	*11.13	8.33	*9.04	6.03	*7.82	4.61	*4.96	4.14	9.65
		0.0 m	-	-	*6.60	*6.60	*16.81	12.19	*12.16	8.01	*9.65	5.85	*8.08	4.51	*5.44	4.21	9.45
		-1.5 m	*6.60	*6.60	*10.58	*10.58	*17.08	12.00	*12.56	7.84	*9.87	5.74	*6.27	4.48	*6.23	4.48	9.00
		-3.0 m	*11.07	*11.07	*15.95	*15.95	*16.29	12.02	*12.18	7.82	*9.44	5.74	-	-	*7.63	5.06	8.26
		-4.5 m	-	-	*19.85	*19.85	*14.29	12.22	*10.69	7.95	-	-	-	-	*8.33	6.31	7.13
		-6.0 m	-	-	-	-	*10.05	*10.05	-	-	-	-	-	-	-	-	5.35

Notes: 1. Machine in “Fine Mode-F” (Power Boost) for lifting capacities.
2. The above loads are in compliance with SAE J1097 and ISO 10567 Hydraulic Excavator Lifting Capacity Standards.
3. Rated loads do not exceed 87% of hydraulic lifting capacity or 75% of tipping load.
4. Rated loads marked with an asterisk (*) are limited by hydraulic capacity rather than tipping load.

Specifications

LIFTING CAPACITY - ECR355EL

At the arm end without bucket.
For Lifting capacity including bucket. simply subtract actual weight of the direct fit bucket or the bucket with quick fit from the following values.
Unit: 1 000 kg.

		Lifting point	1.5 m		3 m		4.5 m		6.0 m		7.5 m		9.0 m		Max. reach		
			Along UC	Across UC	Along UC	Across UC	Along UC	Across UC	Along UC	Across UC	Along UC	Across UC	Along UC	Across UC	Along UC	Across UC	Max. m
Boom :	6.2 m 2 piece boom	9.0 m	-	-	-	-	*11.36	*11.36	-	-	-	-	-	-	*10.22	*10.22	4.83
Arm :	2.55 m	7.5 m	-	-	-	-	*11.52	*11.52	*10.60	8.78	-	-	-	-	*8.91	7.57	6.53
Shoe :	600 mm	6.0 m	-	-	-	-	*12.66	*12.66	*10.80	8.65	*9.00	5.95	-	-	*8.48	5.86	7.56
L/Frame:	LC	4.5 m	-	-	-	-	*14.86	13.03	*11.53	8.30	9.02	5.85	-	-	7.78	5.04	8.20
		3.0 m	-	-	-	-	*16.73	12.00	*12.31	7.87	8.81	5.65	-	-	7.21	4.64	8.52
		1.5 m	-	-	-	-	*16.29	11.31	12.09	7.50	8.60	5.47	-	-	7.05	4.50	8.57
		0.0 m	-	-	-	-	*15.95	11.09	11.84	7.29	8.47	5.34	-	-	7.26	4.62	8.35
		-1.5 m	-	-	*11.22	*11.22	*13.72	11.10	*10.91	7.23	*8.20	5.33	-	-	*7.45	5.04	7.84
		-3.0 m	-	-	-	-	*10.34	*10.34	*8.27	7.34	-	-	-	-	*6.28	6.02	6.97
Boom :	6.2 m 2 piece boom	9.0 m	-	-	-	-	-	-	-	-	-	-	-	-	*7.02	*7.02	5.73
Arm :	3.05 m	7.5 m	-	-	-	-	-	-	*8.89	*8.89	-	-	-	-	*6.19	*6.19	7.21
Shoe :	600 mm	6.0 m	-	-	-	-	*9.24	*9.24	*9.68	8.80	*8.52	6.07	-	-	*5.88	5.22	8.16
L/Frame:	LC	4.5 m	-	-	*20.63	*20.63	*14.04	13.34	*11.08	8.43	9.10	5.92	-	-	*5.82	4.56	8.75
		3.0 m	-	-	-	-	*16.14	12.28	*12.00	7.97	8.86	5.70	*6.47	4.27	*5.97	4.23	9.05
		1.5 m	-	-	-	-	*17.16	11.46	12.16	7.56	8.62	5.48	6.55	4.18	*6.31	4.11	9.10
		0.0 m	-	-	-	-	*16.57	11.09	11.85	7.29	8.45	5.33	-	-	6.60	4.20	8.89
		-1.5 m	-	-	*10.43	*10.43	*14.74	11.02	*11.43	7.19	8.39	5.27	-	-	*7.05	4.53	8.41
		-3.0 m	-	-	-	-	*11.75	11.14	*9.29	7.24	*6.44	5.36	-	-	*6.14	5.26	7.61
Boom :	6.2 m 2 piece boom	9.0 m	-	-	-	-	*6.92	*6.92	-	-	-	-	-	-	*6.78	*6.78	4.55
Arm :	3.70 m	7.5 m	-	-	-	-	-	-	*6.90	*6.90	-	-	-	-	*5.38	*5.38	6.67
Shoe :	600 mm	6.0 m	-	-	-	-	-	-	*7.21	*7.21	*6.33	6.23	-	-	*4.85	*4.85	7.98
L/Frame:	LC	4.5 m	-	-	-	-	-	-	*7.53	*7.53	*7.39	6.18	-	-	*4.62	4.59	8.85
		3.0 m	-	-	*9.14	*9.14	*9.29	*9.29	*9.12	8.59	*8.51	6.00	*6.33	4.41	*4.57	4.07	9.39
		1.5 m	-	-	-	-	*15.15	12.63	*11.45	8.10	8.92	5.75	6.67	4.29	*4.67	3.79	9.68
		0.0 m	-	-	-	-	*16.77	11.65	12.25	7.62	8.64	5.49	6.54	4.17	*4.91	3.69	9.72
		-1.5 m	-	-	*5.85	*5.85	*16.90	11.09	11.85	7.28	8.42	5.29	6.43	4.07	*5.33	3.75	9.53
		-3.0 m	-	-	*9.87	*9.87	*15.68	10.89	11.65	7.10	8.30	5.18	6.40	4.04	*6.04	3.99	9.08
		-4.5 m	-	-	*15.31	*15.31	*13.25	10.93	*10.26	7.09	*7.72	5.19	-	-	*6.02	4.53	8.34
		-6.0 m	-	-	-	-	*9.37	*9.37	*7.20	*7.20	-	-	-	-	-	-	7.22
Boom :	6.2 m 2 piece boom	9.0 m	-	-	-	-	*11.36	*11.36	-	-	-	-	-	-	*10.22	*10.22	4.83
Arm :	2.55 m	7.5 m	-	-	-	-	*11.52	*11.52	*10.60	9.44	-	-	-	-	*8.91	8.16	6.53
Shoe :	600 mm	6.0 m	-	-	-	-	*12.66	*12.66	*10.80	9.31	*9.00	6.45	-	-	*8.48	6.35	7.56
L/Frame:	LC	4.5 m	-	-	-	-	*14.86	14.02	*11.53	8.96	*9.67	6.34	-	-	*8.48	5.49	8.20
Dozer blade down		3.0 m	-	-	-	-	*16.73	12.98	*12.31	8.53	*9.92	6.15	-	-	*8.72	5.06	8.52
		1.5 m	-	-	-	-	*16.29	12.29	*12.68	8.16	*9.97	5.96	-	-	*8.43	4.92	8.57
		0.0 m	-	-	-	-	*15.95	12.07	*12.27	7.95	*9.53	5.84	-	-	*8.06	5.05	8.35
		-1.5 m	-	-	*11.22	*11.22	*13.72	12.09	*10.91	7.89	*8.20	5.83	-	-	*7.45	5.51	7.84
		-3.0 m	-	-	-	-	*10.34	*10.34	*8.27	8.00	-	-	-	-	*6.28	*6.28	6.97
Boom :	6.2 m 2 piece boom	9.0 m	-	-	-	-	-	-	-	-	-	-	-	-	*7.02	*7.02	5.73
Arm :	3.05 m	7.5 m	-	-	-	-	-	-	*8.89	*8.89	-	-	-	-	*6.19	*6.19	7.21
Shoe :	600 mm	6.0 m	-	-	-	-	*9.24	*9.24	*9.68	9.45	*8.52	6.56	-	-	*5.88	5.66	8.16
L/Frame:	LC	4.5 m	-	-	*20.63	*20.63	*14.04	*14.04	*11.08	9.09	*9.37	6.41	-	-	*5.82	4.97	8.75
Dozer blade down		3.0 m	-	-	-	-	*16.14	13.26	*12.00	8.63	*9.74	6.20	*6.47	4.67	*5.97	4.62	9.05
		1.5 m	-	-	-	-	*17.16	12.44	*12.57	8.22	*9.94	5.98	*7.37	4.58	*6.31	4.51	9.10
		0.0 m	-	-	-	-	*16.57	12.07	*12.45	7.95	*9.71	5.82	-	-	*6.93	4.60	8.89
		-1.5 m	-	-	*10.43	*10.43	*14.74	12.00	*11.43	7.84	*8.78	5.76	-	-	*7.05	4.96	8.41
		-3.0 m	-	-	-	-	*11.75	*11.75	*9.29	7.90	*6.44	5.85	-	-	*6.14	5.75	7.61
Boom :	6.2 m 2 piece boom	9.0 m	-	-	-	-	*6.92	*6.92	-	-	-	-	-	-	*6.78	*6.78	4.55
Arm :	3.70 m	7.5 m	-	-	-	-	-	-	*6.90	*6.90	-	-	-	-	*5.38	*5.38	6.67
Shoe :	600 mm	6.0 m	-	-	-	-	-	-	*7.21	*7.21	*6.33	*6.33	-	-	*4.85	*4.85	7.98
L/Frame:	LC	4.5 m	-	-	-	-	-	-	*7.53	*7.53	*7.39	6.68	-	-	*4.62	*4.62	8.85
Dozer blade down		3.0 m	-	-	*9.14	*9.14	*9.29	*9.29	*9.12	*9.12	*8.51	6.49	*6.33	4.80	*4.57	4.45	9.39
		1.5 m	-	-	-	-	*15.15	13.61	*11.45	8.76	*9.39	6.24	*7.64	4.69	*4.67	4.16	9.68
		0.0 m	-	-	-	-	*16.77	12.63	*12.27	8.28	*9.76	5.99	*8.05	4.56	*4.91	4.05	9.72
		-1.5 m	-	-	*5.85	*5.85	*16.90	12.08	*12.48	7.94	*9.77	5.79	*7.78	4.46	*5.33	4.12	9.53
		-3.0 m	-	-	*9.87	*9.87	*15.68	11.88	*11.87	7.76	*9.21	5.68	*6.83	4.43	*6.04	4.38	9.08
		-4.5 m	-	-	*15.31	*15.31	*13.25	11.91	*10.26	7.75	*7.72	5.69	-	-	*6.02	4.96	8.34
		-6.0 m	-	-	-	-	*9.37	*9.37	*7.20	*7.20	-	-	-	-	-	-	7.22

Notes: 1. Machine in “Fine Mode-F” (Power Boost) for lifting capacities.
2. The above loads are in compliance with SAE J1097 and ISO 10567 Hydraulic Excavator Lifting Capacity Standards.
3. Rated loads do not exceed 87% of hydraulic lifting capacity or 75% of tipping load.
4. Rated loads marked with an asterisk (*) are limited by hydraulic capacity rather than tipping load.

LIFTING CAPACITY - ECR355EL

At the arm end without bucket.
For Lifting capacity including bucket. simply subtract actual weight of the direct fit bucket or the bucket with quick fit from the following values.
Unit: 1 000 kg.

		Lifting point	1.5 m		3 m		4.5 m		6.0 m		7.5 m		9.0 m		Max. reach		
			Along UC	Across UC	Along UC	Across UC	Along UC	Across UC	Along UC	Across UC	Along UC	Across UC	Along UC	Across UC	Along UC	Across UC	Max. m
Boom :	6.2 m	9.0 m	-	-	-	-	-	-	-	-	-	-	-	-	*9.20	*9.20	4.72
Arm :	2.55 m	7.5 m	-	-	-	-	-	-	*8.40	*8.40	-	-	-	-	*8.48	7.86	6.45
Shoe :	700 mm	6.0 m	-	-	-	-	*9.68	*9.68	*8.68	*8.68	-	-	-	-	*8.33	6.09	7.49
L/Frame:	LC	4.5 m	-	-	-	-	*12.07	*12.07	*9.70	8.45	*8.59	5.98	-	-	*8.37	5.25	8.13
		3.0 m	-	-	-	-	*15.01	12.27	*11.02	8.05	*9.18	5.80	-	-	*8.52	4.83	8.46
		1.5 m	-	-	-	-	*16.93	11.64	*12.15	7.71	*9.75	5.63	-	-	*8.74	4.69	8.51
		0.0 m	-	-	-	-	*17.29	11.42	*12.71	7.51	*10.04	5.51	-	-	*9.00	4.81	8.29
		-1.5 m	-	-	*12.21	*12.21	*16.61	11.42	*12.53	7.45	*9.74	5.49	-	-	*9.27	5.25	7.77
		-3.0 m	-	-	*19.63	*19.63	*14.92	11.57	*11.36	7.54	-	-	-	-	*9.45	6.26	6.89
		-4.5 m	-	-	-	-	*11.53	*11.53	-	-	-	-	-	-	*9.20	8.92	5.47
Boom :	6.2 m	9.0 m	-	-	-	-	-	-	-	-	-	-	-	-	*6.84	*6.84	5.63
Arm :	3.05 m	7.5 m	-	-	-	-	-	-	*7.59	*7.59	-	-	-	-	*6.09	*6.09	7.13
Shoe :	700 mm	6.0 m	-	-	-	-	-	-	*8.00	*8.00	*7.69	6.18	-	-	*5.82	5.42	8.09
L/Frame:	LC	4.5 m	-	-	*15.71	*15.71	*11.00	*11.00	*9.08	8.56	*8.12	6.04	-	-	*5.81	4.75	8.68
		3.0 m	-	-	-	-	*13.99	12.52	*10.49	8.14	*8.80	5.84	-	-	*5.99	4.41	8.99
		1.5 m	-	-	-	-	*16.33	11.77	*11.77	7.76	*9.48	5.64	*6.78	4.32	*6.39	4.29	9.04
		0.0 m	-	-	-	-	*17.23	11.42	*12.54	7.51	*9.92	5.49	-	-	*7.09	4.38	8.83
		-1.5 m	-	-	*11.23	*11.23	*16.95	11.34	*12.62	7.41	*9.89	5.43	-	-	*8.30	4.72	8.35
		-3.0 m	-	-	*18.61	*18.61	*15.65	11.44	*11.84	7.44	*8.89	5.50	-	-	*8.82	5.47	7.53
		-4.5 m	-	-	*17.33	*17.33	*12.94	11.72	*9.46	7.67	-	-	-	-	*8.77	7.24	6.27
Boom :	6.2 m	9.0 m	-	-	-	-	*6.92	*6.92	-	-	-	-	-	-	*6.78	*6.78	4.55
Arm :	3.70 m	7.5 m	-	-	-	-	-	-	*6.90	*6.90	-	-	-	-	*5.38	*5.38	6.67
Shoe :	700 mm	6.0 m	-	-	-	-	-	-	*7.21	*7.21	*6.33	*6.33	-	-	*4.85	*4.85	7.98
L/Frame:	LC	4.5 m	-	-	-	-	-	-	*7.53	*7.53	*7.39	6.29	-	-	*4.62	*4.62	8.85
		3.0 m	-	-	*9.14	*9.14	*9.29	*9.29	*9.12	8.73	*8.51	6.10	*6.33	4.49	*4.57	4.15	9.39
		1.5 m	-	-	-	-	*15.15	12.84	*11.45	8.24	*9.39	5.85	*7.64	4.38	*4.67	3.87	9.68
		0.0 m	-	-	-	-	*16.77	11.86	*12.27	7.76	*9.76	5.60	*8.05	4.25	*4.91	3.77	9.72
		-1.5 m	-	-	*5.85	*5.85	*16.90	11.30	*12.48	7.42	*9.77	5.40	*7.78	4.15	*5.33	3.83	9.53
		-3.0 m	-	-	*9.87	*9.87	*15.68	11.10	*11.87	7.24	*9.21	5.29	*6.83	4.12	*6.04	4.08	9.08
		-4.5 m	-	-	*15.31	*15.31	*13.25	11.14	*10.26	7.23	*7.72	5.30	-	-	*6.02	4.62	8.34
		-6.0 m	-	-	-	-	*9.37	*9.37	*7.20	*7.20	-	-	-	-	-	-	7.22
Boom :	6.2 m	9.0 m	-	-	-	-	-	-	-	-	-	-	-	-	*9.20	*9.20	4.72
Arm :	2.55 m	7.5 m	-	-	-	-	-	-	*8.40	*8.40	-	-	-	-	*8.48	8.47	6.45
Shoe :	700 mm	6.0 m	-	-	-	-	*9.68	*9.68	*8.68	*8.68	-	-	-	-	*8.33	6.60	7.49
L/Frame:	LC	4.5 m	-	-	-	-	*12.07	*12.07	*9.70	9.12	*8.59	6.49	-	-	*8.37	5.70	8.13
Dozer blade down		3.0 m	-	-	-	-	*15.01	13.27	*11.02	8.72	*9.18	6.31	-	-	*8.52	5.27	8.46
		1.5 m	-	-	-	-	*16.93	12.64	*12.15	8.38	*9.75	6.13	-	-	*8.74	5.13	8.51
		0.0 m	-	-	-	-	*17.29	12.42	*12.71	8.18	*10.04	6.02	-	-	*9.00	5.26	8.29
		-1.5 m	-	-	*12.21	*12.21	*16.61	12.42	*12.53	8.12	*9.74	6.00	-	-	*9.27	5.73	7.77
		-3.0 m	-	-	*19.63	*19.63	*14.92	12.58	*11.36	8.21	-	-	-	-	*9.45	6.82	6.89
		-4.5 m	-	-	-	-	*11.53	*11.53	-	-	-	-	-	-	*9.20	*9.20	5.47
Boom :	6.2 m	9.0 m	-	-	-	-	-	-	-	-	-	-	-	-	*6.84	*6.84	5.63
Arm :	3.05 m	7.5 m	-	-	-	-	-	-	*7.59	*7.59	-	-	-	-	*6.09	*6.09	7.13
Shoe :	700 mm	6.0 m	-	-	-	-	-	-	*8.00	*8.00	*7.69	6.69	-	-	*5.82	*5.82	8.09
L/Frame:	LC	4.5 m	-	-	*15.71	*15.71	*11.00	*11.00	*9.08	*9.08	*8.12	6.55	-	-	*5.81	5.17	8.68
Dozer blade down		3.0 m	-	-	-	-	*13.99	13.53	*10.49	8.81	*8.80	6.35	-	-	*5.99	4.81	8.99
		1.5 m	-	-	-	-	*16.33	12.77	*11.77	8.43	*9.48	6.15	*6.78	4.72	*6.39	4.69	9.04
		0.0 m	-	-	-	-	*17.23	12.43	*12.54	8.18	*9.92	6.00	-	-	*7.09	4.79	8.83
		-1.5 m	-	-	*11.23	*11.23	*16.95	12.35	*12.62	8.08	*9.89	5.94	-	-	*8.30	5.16	8.35
		-3.0 m	-	-	*18.61	*18.61	*15.65	12.45	*11.84	8.11	*8.89	6.01	-	-	*8.82	5.97	7.53
		-4.5 m	-	-	*17.33	*17.33	*12.94	12.72	*9.46	8.34	-	-	-	-	*8.77	7.87	6.27
Boom :	6.2 m	9.0 m	-	-	-	-	-	-	*6.60	*6.60	-	-	-	-	*5.25	*5.25	6.57
Arm :	3.70 m	7.5 m	-	-	-	-	-	-	-	-	*6.02	*6.02	-	-	*4.76	*4.76	7.89
Shoe :	700 mm	6.0 m	-	-	-	-	-	-	*7.07	*7.07	*6.92	6.78	-	-	*4.57	*4.57	8.77
L/Frame:	LC	4.5 m	-	-	-	-	*9.52	*9.52	*8.19	*8.19	*7.46	6.61	*6.01	4.92	*4.56	*4.56	9.32
Dozer blade down		3.0 m	-	-	-	-	*12.56	*12.56	*9.68	8.92	*8.23	6.38	*7.41	4.82	*4.68	4.34	9.60
		1.5 m	-	-	-	-	*15.30	12.94	*11.13	8.49	*9.04	6.15	*7.82	4.70	*4.96	4.23	9.65
		0.0 m	-	-	*6.60	*6.60	*16.81	12.42	*12.16	8.17	*9.65	5.96	*8.08	4.60	*5.44	4.30	9.45
		-1.5 m	*6.60	*6.60	*10.58	*10.58	*17.08	12.23	*12.56	8.00	*9.87	5.86	*6.27	4.57	*6.23	4.57	9.00
		-3.0 m	*11.07	*11.07	*15.95	*15.95	*16.29	12.25	*12.18	7.97	*9.44	5.85	-	-	*7.63	5.16	8.26
		-4.5 m	-	-	*19.85	*19.85	*14.29	12.44	*10.69	8.10	-	-	-	-	*8.33	6.43	7.13
		-6.0 m	-	-	-	-	*10.05	*10.05	-	-	-	-	-	-	-	-	5.35

Notes: 1. Machine in “Fine Mode-F” (Power Boost) for lifting capacities.
2. The above loads are in compliance with SAE J1097 and ISO 10567 Hydraulic Excavator Lifting Capacity Standards.
3. Rated loads do not exceed 87% of hydraulic lifting capacity or 75% of tipping load.
4. Rated loads marked with an asterisk (*) are limited by hydraulic capacity rather than tipping load.

Specifications

LIFTING CAPACITY - ECR355EL

At the arm end without bucket.
For Lifting capacity including bucket. simply subtract actual weight of the direct fit bucket or the bucket with quick fit from the following values.
Unit: 1 000 kg.

		Lifting point	1.5 m		3 m		4.5 m		6.0 m		7.5 m		9.0 m		Max. reach		
			Along UC	Across UC	Along UC	Across UC	Along UC	Across UC	Along UC	Across UC	Along UC	Across UC	Along UC	Across UC	Along UC	Across UC	Max. m
Boom :	6.2 m 2 piece boom	9.0 m	-	-	-	-	*11.36	*11.36	-	-	-	-	-	-	*10.22	*10.22	4.83
Arm :	2.55 m	7.5 m	-	-	-	-	*11.52	*11.52	*10.60	8.92	-	-	-	-	*8.91	7.69	6.53
Shoe :	700 mm	6.0 m	-	-	-	-	*12.66	*12.66	*10.80	8.79	*9.00	6.06	-	-	*8.48	5.96	7.56
L/Frame:	LC	4.5 m	-	-	-	-	*14.86	13.24	*11.53	8.44	*9.67	5.95	-	-	*8.48	5.14	8.20
		3.0 m	-	-	-	-	*16.73	12.20	*12.31	8.01	*9.92	5.76	-	-	*8.72	4.73	8.52
		1.5 m	-	-	-	-	*16.29	11.52	*12.68	7.64	*9.97	5.57	-	-	*8.43	4.59	8.57
		0.0 m	-	-	-	-	*15.95	11.29	*12.27	7.43	*9.53	5.45	-	-	*8.06	4.71	8.35
		-1.5 m	-	-	*11.22	*11.22	*13.72	11.31	*10.91	7.37	*8.20	5.44	-	-	*7.45	5.14	7.84
		-3.0 m	-	-	-	-	*10.34	*10.34	*8.27	7.48	-	-	-	-	*6.28	6.13	6.97
Boom :	6.2 m 2 piece boom	9.0 m	-	-	-	-	-	-	-	-	-	-	-	-	*7.02	*7.02	5.73
Arm :	3.05 m	7.5 m	-	-	-	-	-	-	*8.89	*8.89	-	-	-	-	*6.19	*6.19	7.21
Shoe :	700 mm	6.0 m	-	-	-	-	*9.24	*9.24	*9.68	8.94	*8.52	6.17	-	-	*5.88	5.31	8.16
L/Frame:	LC	4.5 m	-	-	*20.63	*20.63	*14.04	13.54	*11.08	8.57	*9.37	6.03	-	-	*5.82	4.65	8.75
		3.0 m	-	-	-	-	*16.14	12.48	*12.00	8.11	*9.74	5.81	*6.47	4.36	*5.97	4.31	9.05
		1.5 m	-	-	-	-	*17.16	11.67	*12.57	7.70	*9.94	5.59	*7.37	4.27	*6.31	4.20	9.10
		0.0 m	-	-	-	-	*16.57	11.30	*12.45	7.43	*9.71	5.43	-	-	*6.93	4.29	8.89
		-1.5 m	-	-	*10.43	*10.43	*14.74	11.23	*11.43	7.33	*8.78	5.37	-	-	*7.05	4.62	8.41
		-3.0 m	-	-	-	-	*11.75	11.35	*9.29	7.38	*6.44	5.46	-	-	*6.14	5.37	7.61
Boom :	6.2 m 2 piece boom	9.0 m	-	-	-	-	-	-	*6.60	*6.60	-	-	-	-	*5.25	*5.25	6.57
Arm :	3.70 m	7.5 m	-	-	-	-	-	-	-	-	*6.02	*6.02	-	-	*4.76	*4.76	7.89
Shoe :	700 mm	6.0 m	-	-	-	-	-	-	*7.07	*7.07	*6.92	6.28	-	-	*4.57	*4.57	8.77
L/Frame:	LC	4.5 m	-	-	-	-	*9.52	*9.52	*8.19	*8.19	*7.46	6.11	*6.01	4.52	*4.56	4.25	9.32
		3.0 m	-	-	-	-	*12.56	*12.56	*9.68	8.25	*8.23	5.88	*7.41	4.41	*4.68	3.96	9.60
		1.5 m	-	-	-	-	*15.30	11.94	*11.13	7.81	*9.04	5.64	*7.82	4.30	*4.96	3.86	9.65
		0.0 m	-	-	*6.60	*6.60	*16.81	11.42	*12.16	7.49	*9.65	5.46	*8.08	4.20	*5.44	3.91	9.45
		-1.5 m	*6.60	*6.60	*10.58	*10.58	*17.08	11.22	*12.56	7.33	*9.87	5.35	*6.27	4.17	*6.23	4.17	9.00
		-3.0 m	*11.07	*11.07	*15.95	*15.95	*16.29	11.24	*12.18	7.30	*9.44	5.35	-	-	*7.63	4.72	8.26
		-4.5 m	-	-	*19.85	*19.85	*14.29	11.44	*10.69	7.43	-	-	-	-	*8.33	5.89	7.13
		-6.0 m	-	-	-	-	*10.05	*10.05	-	-	-	-	-	-	-	-	5.35
Boom :	6.2 m 2 piece boom	9.0 m	-	-	-	-	*11.36	*11.36	-	-	-	-	-	-	*10.22	*10.22	4.83
Arm :	2.55 m	7.5 m	-	-	-	-	*11.52	*11.52	*10.60	9.59	-	-	-	-	*8.91	8.29	6.53
Shoe :	700 mm	6.0 m	-	-	-	-	*12.66	*12.66	*10.80	9.47	*9.00	6.56	-	-	*8.48	6.46	7.56
L/Frame:	LC	4.5 m	-	-	-	-	*14.86	14.24	*11.53	9.12	*9.67	6.46	-	-	*8.48	5.59	8.20
Dozer blade down		3.0 m	-	-	-	-	*16.73	13.21	*12.31	8.68	*9.92	6.26	-	-	*8.72	5.16	8.52
		1.5 m	-	-	-	-	*16.29	12.52	*12.68	8.31	*9.97	6.08	-	-	*8.43	5.02	8.57
		0.0 m	-	-	-	-	*15.95	12.30	*12.27	8.10	*9.53	5.95	-	-	*8.06	5.15	8.35
		-1.5 m	-	-	*11.22	*11.22	*13.72	12.32	*10.91	8.05	*8.20	5.94	-	-	*7.45	5.62	7.84
		-3.0 m	-	-	-	-	*10.34	*10.34	*8.27	8.16	-	-	-	-	*6.28	*6.28	6.97
Boom :	6.2 m 2 piece boom	9.0 m	-	-	-	-	-	-	-	-	-	-	-	-	*6.84	*6.84	5.63
Arm :	3.05 m	7.5 m	-	-	-	-	-	-	*7.59	*7.59	-	-	-	-	*6.09	*6.09	7.13
Shoe :	700 mm	6.0 m	-	-	-	-	-	-	*8.00	*8.00	*7.69	6.69	-	-	*5.82	*5.82	8.09
L/Frame:	LC	4.5 m	-	-	*15.71	*15.71	*11.00	*11.00	*9.08	*9.08	*8.12	6.55	-	-	*5.81	5.17	8.68
Dozer blade down		3.0 m	-	-	-	-	*13.99	13.53	*10.49	8.81	*8.80	6.35	-	-	*5.99	4.81	8.99
		1.5 m	-	-	-	-	*16.33	12.77	*11.77	8.43	*9.48	6.15	*6.78	4.72	*6.39	4.69	9.04
		0.0 m	-	-	-	-	*17.23	12.43	*12.54	8.18	*9.92	6.00	-	-	*7.09	4.79	8.83
		-1.5 m	-	-	*11.23	*11.23	*16.95	12.35	*12.62	8.08	*9.89	5.94	-	-	*8.30	5.16	8.35
		-3.0 m	-	-	*18.61	*18.61	*15.65	12.45	*11.84	8.11	*8.89	6.01	-	-	*8.82	5.97	7.53
		-4.5 m	-	-	*17.33	*17.33	*12.94	12.72	*9.46	8.34	-	-	-	-	*8.77	7.87	6.27
Boom :	6.2 m 2 piece boom	9.0 m	-	-	-	-	*6.92	*6.92	-	-	-	-	-	-	*6.78	*6.78	4.55
Arm :	3.70 m	7.5 m	-	-	-	-	-	-	*6.90	*6.90	-	-	-	-	*5.38	*5.38	6.67
Shoe :	700 mm	6.0 m	-	-	-	-	-	-	*7.21	*7.21	*6.33	*6.33	-	-	*4.85	*4.85	7.98
L/Frame:	LC	4.5 m	-	-	-	-	-	-	*7.53	*7.53	*7.39	6.79	-	-	*4.62	*4.62	8.85
Dozer blade down		3.0 m	-	-	*9.14	*9.14	*9.29	*9.29	*9.12	*9.12	*8.51	6.61	*6.33	4.89	*4.57	4.54	9.39
		1.5 m	-	-	-	-	*15.15	13.84	*11.45	8.91	*9.39	6.36	*7.64	4.78	*4.67	4.24	9.68
		0.0 m	-	-	-	-	*16.77	12.86	*12.27	8.44	*9.76	6.10	*8.05	4.65	*4.91	4.14	9.72
		-1.5 m	-	-	*5.85	*5.85	*16.90	12.31	*12.48	8.09	*9.77	5.90	*7.78	4.56	*5.33	4.20	9.53
		-3.0 m	-	-	*9.87	*9.87	*15.68	12.11	*11.87	7.91	*9.21	5.79	*6.83	4.53	*6.04	4.48	9.08
		-4.5 m	-	-	*15.31	*15.31	*13.25	12.14	*10.26	7.90	*7.72	5.80	-	-	*6.02	5.06	8.34
		-6.0 m	-	-	-	-	*9.37	*9.37	*7.20	*7.20	-	-	-	-	-	-	7.22

Notes: 1. Machine in “Fine Mode-F” (Power Boost) for lifting capacities.
2. The above loads are in compliance with SAE J1097 and ISO 10567 Hydraulic Excavator Lifting Capacity Standards.
3. Rated loads do not exceed 87% of hydraulic lifting capacity or 75% of tipping load.
4. Rated loads marked with an asterisk (*) are limited by hydraulic capacity rather than tipping load.

LIFTING CAPACITY - ECR355EL

At the arm end without bucket.
For Lifting capacity including bucket. simply subtract actual weight of the direct fit bucket or the bucket with quick fit from the following values.
Unit: 1 000 kg.

		Lifting point	1.5 m		3 m		4.5 m		6.0 m		7.5 m		9.0 m		Max. reach		
			Along UC	Across UC	Along UC	Across UC	Along UC	Across UC	Along UC	Across UC	Along UC	Across UC	Along UC	Across UC	Along UC	Across UC	Max. m
Boom :	6.2 m	9.0 m	-	-	-	-	-	-	-	-	-	-	-	-	*9.20	*9.20	4.72
Arm :	2.55 m	7.5 m	-	-	-	-	-	-	*8.40	*8.40	-	-	-	-	*8.48	7.97	6.45
Shoe :	800 mm	6.0 m	-	-	-	-	*9.68	*9.68	*8.68	*8.68	-	-	-	-	*8.33	6.18	7.49
L/Frame:	LC	4.5 m	-	-	-	-	*12.07	*12.07	*9.70	8.57	*8.59	6.08	-	-	*8.37	5.33	8.13
		3.0 m	-	-	-	-	*15.01	12.45	*11.02	8.18	*9.18	5.90	-	-	*8.52	4.91	8.46
		1.5 m	-	-	-	-	*16.93	11.82	*12.15	7.84	*9.75	5.72	-	-	*8.74	4.77	8.51
		0.0 m	-	-	-	-	*17.29	11.60	*12.71	7.63	*10.04	5.61	-	-	*9.00	4.89	8.29
		-1.5 m	-	-	*12.21	*12.21	*16.61	11.60	*12.53	7.58	*9.74	5.58	-	-	*9.27	5.33	7.77
		-3.0 m	-	-	*19.63	*19.63	*14.92	11.76	*11.36	7.66	-	-	-	-	*9.45	6.36	6.89
		-4.5 m	-	-	-	-	*11.53	*11.53	-	-	-	-	-	-	*9.20	9.06	5.47
Boom :	6.2 m	9.0 m	-	-	-	-	-	-	-	-	-	-	-	-	*6.84	*6.84	5.63
Arm :	3.05 m	7.5 m	-	-	-	-	-	-	*7.59	*7.59	-	-	-	-	*6.09	*6.09	7.13
Shoe :	800 mm	6.0 m	-	-	-	-	-	-	*8.00	*8.00	*7.69	6.27	-	-	*5.82	5.51	8.09
L/Frame:	LC	4.5 m	-	-	*15.71	*15.71	*11.00	*11.00	*9.08	8.69	*8.12	6.14	-	-	*5.81	4.83	8.68
		3.0 m	-	-	-	-	*13.99	12.71	*10.49	8.27	*8.80	5.93	-	-	*5.99	4.48	8.99
		1.5 m	-	-	-	-	*16.33	11.95	*11.77	7.89	*9.48	5.73	*6.78	4.39	*6.39	4.37	9.04
		0.0 m	-	-	-	-	*17.23	11.61	*12.54	7.63	*9.92	5.59	-	-	*7.09	4.45	8.83
		-1.5 m	-	-	*11.23	*11.23	*16.95	11.53	*12.62	7.53	*9.89	5.53	-	-	*8.30	4.80	8.35
		-3.0 m	-	-	*18.61	*18.61	*15.65	11.63	*11.84	7.57	*8.89	5.60	-	-	*8.82	5.56	7.53
		-4.5 m	-	-	*17.33	*17.33	*12.94	11.90	*9.46	7.79	-	-	-	-	*8.77	7.35	6.27
Boom :	6.2 m	9.0 m	-	-	-	-	-	-	*6.60	*6.60	-	-	-	-	*5.25	*5.25	6.57
Arm :	3.70 m	7.5 m	-	-	-	-	-	-	-	-	*6.02	*6.02	-	-	*4.76	*4.76	7.89
Shoe :	800 mm	6.0 m	-	-	-	-	-	-	*7.07	*7.07	*6.92	6.37	-	-	*4.57	*4.57	8.77
L/Frame:	LC	4.5 m	-	-	-	-	*9.52	*9.52	*8.19	*8.19	*7.46	6.20	*6.01	4.59	*4.56	4.32	9.32
		3.0 m	-	-	-	-	*12.56	*12.56	*9.68	8.37	*8.23	5.97	*7.41	4.49	*4.68	4.03	9.60
		1.5 m	-	-	-	-	*15.30	12.12	*11.13	7.94	*9.04	5.74	*7.82	4.37	*4.96	3.93	9.65
		0.0 m	-	-	*6.60	*6.60	*16.81	11.60	*12.16	7.62	*9.65	5.55	*8.08	4.28	*5.44	3.98	9.45
		-1.5 m	*6.60	*6.60	*10.58	*10.58	*17.08	11.41	*12.56	7.45	*9.87	5.44	*6.27	4.24	*6.23	4.24	9.00
		-3.0 m	*11.07	*11.07	*15.95	*15.95	*16.29	11.43	*12.18	7.43	*9.44	5.44	-	-	*7.63	4.80	8.26
		-4.5 m	-	-	*19.85	*19.85	*14.29	11.63	*10.69	7.56	-	-	-	-	*8.33	5.99	7.13
		-6.0 m	-	-	-	-	*10.05	*10.05	-	-	-	-	-	-	-	-	5.35
Boom :	6.2 m	9.0 m	-	-	-	-	-	-	-	-	-	-	-	-	*9.20	*9.20	4.72
Arm :	2.55 m	7.5 m	-	-	-	-	-	-	*8.40	*8.40	-	-	-	-	*8.48	*8.48	6.45
Shoe :	800 mm	6.0 m	-	-	-	-	*9.68	*9.68	*8.68	*8.68	-	-	-	-	*8.33	6.67	7.49
L/Frame:	LC	4.5 m	-	-	-	-	*12.07	*12.07	*9.70	9.22	*8.59	6.56	-	-	*8.37	5.77	8.13
Dozer blade down		3.0 m	-	-	-	-	*15.01	13.41	*11.02	8.82	*9.18	6.38	-	-	*8.52	5.33	8.46
		1.5 m	-	-	-	-	*16.93	12.78	*12.15	8.48	*9.75	6.20	-	-	*8.74	5.19	8.51
		0.0 m	-	-	-	-	*17.29	12.56	*12.71	8.28	*10.04	6.09	-	-	*9.00	5.32	8.29
		-1.5 m	-	-	*12.21	*12.21	*16.61	12.57	*12.53	8.22	*9.74	6.07	-	-	*9.27	5.80	7.77
		-3.0 m	-	-	*19.63	*19.63	*14.92	12.72	*11.36	8.31	-	-	-	-	*9.45	6.90	6.89
		-4.5 m	-	-	-	-	*11.53	*11.53	-	-	-	-	-	-	*9.20	*9.20	5.47
Boom :	6.2 m	9.0 m	-	-	-	-	-	-	-	-	-	-	-	-	*6.84	*6.84	5.63
Arm :	3.05 m	7.5 m	-	-	-	-	-	-	*7.59	*7.59	-	-	-	-	*6.09	*6.09	7.13
Shoe :	800 mm	6.0 m	-	-	-	-	-	-	*8.00	*8.00	*7.69	6.76	-	-	*5.82	*5.82	8.09
L/Frame:	LC	4.5 m	-	-	*15.71	*15.71	*11.00	*11.00	*9.08	*9.08	*8.12	6.62	-	-	*5.81	5.23	8.68
Dozer blade down		3.0 m	-	-	-	-	*13.99	13.67	*10.49	8.91	*8.80	6.42	-	-	*5.99	4.87	8.99
		1.5 m	-	-	-	-	*16.33	12.92	*11.77	8.53	*9.48	6.22	*6.78	4.78	*6.39	4.75	9.04
		0.0 m	-	-	-	-	*17.23	12.57	*12.54	8.28	*9.92	6.07	-	-	*7.09	4.85	8.83
		-1.5 m	-	-	*11.23	*11.23	*16.95	12.49	*12.62	8.17	*9.89	6.01	-	-	*8.30	5.22	8.35
		-3.0 m	-	-	*18.61	*18.61	*15.65	12.59	*11.84	8.21	*8.89	6.08	-	-	*8.82	6.05	7.53
		-4.5 m	-	-	*17.33	*17.33	*12.94	12.87	*9.46	8.43	-	-	-	-	*8.77	7.96	6.27
Boom :	6.2 m	9.0 m	-	-	-	-	-	-	*6.60	*6.60	-	-	-	-	*5.25	*5.25	6.57
Arm :	3.70 m	7.5 m	-	-	-	-	-	-	-	-	*6.02	*6.02	-	-	*4.76	*4.76	7.89
Shoe :	800 mm	6.0 m	-	-	-	-	-	-	*7.07	*7.07	*6.92	6.85	-	-	*4.57	*4.57	8.77
L/Frame:	LC	4.5 m	-	-	-	-	*9.52	*9.52	*8.19	*8.19	*7.46	6.68	*6.01	4.98	*4.56	*4.56	9.32
Dozer blade down		3.0 m	-	-	-	-	*12.56	*12.56	*9.68	9.02	*8.23	6.45	*7.41	4.88	*4.68	4.39	9.60
		1.5 m	-	-	-	-	*15.30	13.08	*11.13	8.58	*9.04	6.22	*7.82	4.76	*4.96	4.28	9.65
		0.0 m	-	-	*6.60	*6.60	*16.81	12.57	*12.16	8.26	*9.65	6.03	*8.08	4.66	*5.44	4.35	9.45
		-1.5 m	*6.60	*6.60	*10.58	*10.58	*17.08	12.37	*12.56	8.09	*9.87	5.93	*6.27	4.63	*6.23	4.63	9.00
		-3.0 m	*11.07	*11.07	*15.95	*15.95	*16.29	12.39	*12.18	8.07	*9.44	5.93	-	-	*7.63	5.23	8.26
		-4.5 m	-	-	*19.85	*19.85	*14.29	12.59	*10.69	8.20	-	-	-	-	*8.33	6.51	7.13
		-6.0 m	-	-	-	-	*10.05	*10.05	-	-	-	-	-	-	-	-	5.35

Notes: 1. Machine in “Fine Mode-F” (Power Boost) for lifting capacities.
2. The above loads are in compliance with SAE J1097 and ISO 10567 Hydraulic Excavator Lifting Capacity Standards.
3. Rated loads do not exceed 87% of hydraulic lifting capacity or 75% of tipping load.
4. Rated loads marked with an asterisk (*) are limited by hydraulic capacity rather than tipping load.

Specifications

LIFTING CAPACITY - ECR355EL

At the arm end without bucket.
For Lifting capacity including bucket. simply subtract actual weight of the direct fit bucket or the bucket with quick fit from the following values.
Unit: 1 000 kg.

		Lifting point	1.5 m		3 m		4.5 m		6.0 m		7.5 m		9.0 m		Max. reach		
			Along UC	Across UC	Along UC	Across UC	Along UC	Across UC	Along UC	Across UC	Along UC	Across UC	Along UC	Across UC	Along UC	Across UC	Max. m
Boom :	6.2 m 2 piece boom	9.0 m	-	-	-	-	*11.36	*11.36	-	-	-	-	-	-	*10.22	*10.22	4.83
Arm :	2.55 m	7.5 m	-	-	-	-	*11.52	*11.52	*10.60	9.05	-	-	-	-	*8.91	7.80	6.53
Shoe :	800 mm	6.0 m	-	-	-	-	*12.66	*12.66	*10.80	8.92	*9.00	6.15	-	-	*8.48	6.06	7.56
L/Frame:	LC	4.5 m	-	-	-	-	*14.86	13.43	*11.53	8.57	*9.67	6.05	-	-	*8.48	5.22	8.20
		3.0 m	-	-	-	-	*16.73	12.39	*12.31	8.13	*9.92	5.85	-	-	*8.72	4.81	8.52
		1.5 m	-	-	-	-	*16.29	11.70	*12.68	7.76	*9.97	5.66	-	-	*8.43	4.67	8.57
		0.0 m	-	-	-	-	*15.95	11.48	*12.27	7.55	*9.53	5.54	-	-	*8.06	4.79	8.35
		-1.5 m	-	-	*11.22	*11.22	*13.72	11.50	*10.91	7.50	*8.20	5.53	-	-	*7.45	5.23	7.84
		-3.0 m	-	-	-	-	*10.34	*10.34	*8.27	7.61	-	-	-	-	*6.28	6.23	6.97
Boom :	6.2 m 2 piece boom	9.0 m	-	-	-	-	-	-	-	-	-	-	-	-	*7.02	*7.02	5.73
Arm :	3.05 m	7.5 m	-	-	-	-	-	-	*8.89	*8.89	-	-	-	-	*6.19	*6.19	7.21
Shoe :	800 mm	6.0 m	-	-	-	-	*9.24	*9.24	*9.68	9.06	*8.52	6.27	-	-	*5.88	5.40	8.16
L/Frame:	LC	4.5 m	-	-	*20.63	*20.63	*14.04	13.73	*11.08	8.69	*9.37	6.12	-	-	*5.82	4.73	8.75
		3.0 m	-	-	-	-	*16.14	12.67	*12.00	8.24	*9.74	5.90	*6.47	4.43	*5.97	4.39	9.05
		1.5 m	-	-	-	-	*17.16	11.85	*12.57	7.82	*9.94	5.68	*7.37	4.34	*6.31	4.27	9.10
		0.0 m	-	-	-	-	*16.57	11.48	*12.45	7.55	*9.71	5.53	-	-	*6.93	4.36	8.89
		-1.5 m	-	-	*10.43	*10.43	*14.74	11.41	*11.43	7.45	*8.78	5.47	-	-	*7.05	4.70	8.41
		-3.0 m	-	-	-	-	*11.75	11.54	*9.29	7.50	*6.44	5.55	-	-	*6.14	5.46	7.61
Boom :	6.2 m 2 piece boom	9.0 m	-	-	-	-	*6.92	*6.92	-	-	-	-	-	-	*6.78	*6.78	4.55
Arm :	3.70 m	7.5 m	-	-	-	-	-	-	*6.90	*6.90	-	-	-	-	*5.38	*5.38	6.67
Shoe :	800 mm	6.0 m	-	-	-	-	-	-	*7.21	*7.21	*6.33	*6.33	-	-	*4.85	*4.85	7.98
L/Frame:	LC	4.5 m	-	-	-	-	-	-	*7.53	*7.53	*7.39	6.38	-	-	*4.62	*4.62	8.85
		3.0 m	-	-	*9.14	*9.14	*9.29	*9.29	*9.12	8.86	*8.51	6.20	*6.33	4.56	*4.57	4.22	9.39
		1.5 m	-	-	-	-	*15.15	13.02	*11.45	8.36	*9.39	5.95	*7.64	4.45	*4.67	3.94	9.68
		0.0 m	-	-	-	-	*16.77	12.04	*12.27	7.89	*9.76	5.69	*8.05	4.33	*4.91	3.84	9.72
		-1.5 m	-	-	*5.85	*5.85	*16.90	11.49	*12.48	7.54	*9.77	5.49	*7.78	4.23	*5.33	3.90	9.53
		-3.0 m	-	-	*9.87	*9.87	*15.68	11.29	*11.87	7.37	*9.21	5.38	*6.83	4.20	*6.04	4.15	9.08
		-4.5 m	-	-	*15.31	*15.31	*13.25	11.32	*10.26	7.35	*7.72	5.39	-	-	*6.02	4.70	8.34
		-6.0 m	-	-	-	-	*9.37	*9.37	*7.20	*7.20	-	-	-	-	-	-	7.22
Boom :	6.2 m 2 piece boom	9.0 m	-	-	-	-	*11.36	*11.36	-	-	-	-	-	-	*10.22	*10.22	4.83
Arm :	2.55 m	7.5 m	-	-	-	-	*11.52	*11.52	*10.60	9.69	-	-	-	-	*8.91	8.38	6.53
Shoe :	800 mm	6.0 m	-	-	-	-	*12.66	*12.66	*10.80	9.56	*9.00	6.63	-	-	*8.48	6.54	7.56
L/Frame:	LC	4.5 m	-	-	-	-	*14.86	14.39	*11.53	9.21	*9.67	6.53	-	-	*8.48	5.65	8.20
Dozer blade down		3.0 m	-	-	-	-	*16.73	13.35	*12.31	8.78	*9.92	6.34	-	-	*8.72	5.22	8.52
		1.5 m	-	-	-	-	*16.29	12.67	*12.68	8.41	*9.97	6.15	-	-	*8.43	5.08	8.57
		0.0 m	-	-	-	-	*15.95	12.44	*12.27	8.19	*9.53	6.03	-	-	*8.06	5.21	8.35
		-1.5 m	-	-	*11.22	*11.22	*13.72	12.46	*10.91	8.14	*8.20	6.01	-	-	*7.45	5.68	7.84
		-3.0 m	-	-	-	-	*10.34	*10.34	*8.27	8.25	-	-	-	-	*6.28	*6.28	6.97
Boom :	6.2 m 2 piece boom	9.0 m	-	-	-	-	-	-	-	-	-	-	-	-	*7.02	*7.02	5.73
Arm :	3.05 m	7.5 m	-	-	-	-	-	-	*8.89	*8.89	-	-	-	-	*6.19	*6.19	7.21
Shoe :	800 mm	6.0 m	-	-	-	-	*9.24	*9.24	*9.68	*9.68	*8.52	6.75	-	-	*5.88	5.83	8.16
L/Frame:	LC	4.5 m	-	-	*20.63	*20.63	*14.04	*14.04	*11.08	9.34	*9.37	6.60	-	-	*5.82	5.13	8.75
Dozer blade down		3.0 m	-	-	-	-	*16.14	13.63	*12.00	8.88	*9.74	6.38	*6.47	4.82	*5.97	4.77	9.05
		1.5 m	-	-	-	-	*17.16	12.81	*12.57	8.47	*9.94	6.17	*7.37	4.73	*6.31	4.65	9.10
		0.0 m	-	-	-	-	*16.57	12.44	*12.45	8.20	*9.71	6.01	-	-	*6.93	4.75	8.89
		-1.5 m	-	-	*10.43	*10.43	*14.74	12.38	*11.43	8.09	*8.78	5.95	-	-	*7.05	5.12	8.41
		-3.0 m	-	-	-	-	*11.75	*11.75	*9.29	8.14	*6.44	6.04	-	-	*6.14	5.93	7.61
Boom :	6.2 m 2 piece boom	9.0 m	-	-	-	-	*6.92	*6.92	-	-	-	-	-	-	*6.78	*6.78	4.55
Arm :	3.70 m	7.5 m	-	-	-	-	-	-	*6.90	*6.90	-	-	-	-	*5.38	*5.38	6.67
Shoe :	800 mm	6.0 m	-	-	-	-	-	-	*7.21	*7.21	*6.33	*6.33	-	-	*4.85	*4.85	7.98
L/Frame:	LC	4.5 m	-	-	-	-	-	-	*7.53	*7.53	*7.39	6.86	-	-	*4.62	*4.62	8.85
Dozer blade down		3.0 m	-	-	*9.14	*9.14	*9.29	*9.29	*9.12	*9.12	*8.51	6.68	*6.33	4.95	*4.57	*4.57	9.39
		1.5 m	-	-	-	-	*15.15	13.98	*11.45	9.01	*9.39	6.43	*7.64	4.84	*4.67	4.29	9.68
		0.0 m	-	-	-	-	*16.77	13.01	*12.27	8.53	*9.76	6.18	*8.05	4.71	*4.91	4.19	9.72
		-1.5 m	-	-	*5.85	*5.85	*16.90	12.45	*12.48	8.19	*9.77	5.98	*7.78	4.61	*5.33	4.26	9.53
		-3.0 m	-	-	*9.87	*9.87	*15.68	12.25	*11.87	8.01	*9.21	5.87	*6.83	4.58	*6.04	4.53	9.08
		-4.5 m	-	-	*15.31	*15.31	*13.25	12.28	*10.26	7.99	*7.72	5.87	-	-	*6.02	5.12	8.34
		-6.0 m	-	-	-	-	*9.37	*9.37	*7.20	*7.20	-	-	-	-	-	-	7.22

Notes: 1. Machine in “Fine Mode-F” (Power Boost) for lifting capacities.
2. The above loads are in compliance with SAE J1097 and ISO 10567 Hydraulic Excavator Lifting Capacity Standards.
3. Rated loads do not exceed 87% of hydraulic lifting capacity or 75% of tipping load.
4. Rated loads marked with an asterisk (*) are limited by hydraulic capacity rather than tipping load.

LIFTING CAPACITY - ECR355EL

At the arm end without bucket.
For Lifting capacity including bucket. simply subtract actual weight of the direct fit bucket or the bucket with quick fit from the following values.
Unit: 1 000 kg.

		Lifting point	1.5 m		3 m		4.5 m		6.0 m		7.5 m		9.0 m		Max. reach		
			Along UC	Across UC	Along UC	Across UC	Along UC	Across UC	Along UC	Across UC	Along UC	Across UC	Along UC	Across UC	Along UC	Across UC	Max. m
Boom :	6.2 m	9.0 m	-	-	-	-	-	-	-	-	-	-	-	-	*9.20	*9.20	4.72
Arm :	2.55 m	7.5 m	-	-	-	-	-	-	*8.40	*8.40	-	-	-	-	*8.48	8.01	6.45
Shoe :	850 mm	6.0 m	-	-	-	-	*9.68	*9.68	*8.68	*8.68	-	-	-	-	*8.33	6.22	7.49
L/Frame:	LC	4.5 m	-	-	-	-	*12.07	*12.07	*9.70	8.62	*8.59	6.11	-	-	*8.37	5.36	8.13
		3.0 m	-	-	-	-	*15.01	12.52	*11.02	8.22	*9.18	5.93	-	-	*8.52	4.94	8.46
		1.5 m	-	-	-	-	*16.93	11.89	*12.15	7.88	*9.75	5.76	-	-	*8.74	4.80	8.51
		0.0 m	-	-	-	-	*17.29	11.67	*12.71	7.68	*10.04	5.64	-	-	*9.00	4.92	8.29
		-1.5 m	-	-	*12.21	*12.21	*16.61	11.67	*12.53	7.62	*9.74	5.62	-	-	*9.27	5.37	7.77
		-3.0 m	-	-	*19.63	*19.63	*14.92	11.82	*11.36	7.71	-	-	-	-	*9.45	6.40	6.89
		-4.5 m	-	-	-	-	*11.53	*11.53	-	-	-	-	-	-	*9.20	9.11	5.47
Boom :	6.2 m	9.0 m	-	-	-	-	-	-	-	-	-	-	-	-	*6.84	*6.84	5.63
Arm :	3.05 m	7.5 m	-	-	-	-	-	-	*7.59	*7.59	-	-	-	-	*6.09	*6.09	7.13
Shoe :	850 mm	6.0 m	-	-	-	-	-	-	*8.00	*8.00	*7.69	6.31	-	-	*5.82	5.54	8.09
L/Frame:	LC	4.5 m	-	-	*15.71	*15.71	*11.00	*11.00	*9.08	8.73	*8.12	6.17	-	-	*5.81	4.86	8.68
		3.0 m	-	-	-	-	*13.99	12.77	*10.49	8.31	*8.80	5.97	-	-	*5.99	4.51	8.99
		1.5 m	-	-	-	-	*16.33	12.02	*11.77	7.93	*9.48	5.77	*6.78	4.42	*6.39	4.39	9.04
		0.0 m	-	-	-	-	*17.23	11.67	*12.54	7.68	*9.92	5.62	-	-	*7.09	4.48	8.83
		-1.5 m	-	-	*11.23	*11.23	*16.95	11.60	*12.62	7.57	*9.89	5.56	-	-	*8.30	4.83	8.35
		-3.0 m	-	-	*18.61	*18.61	*15.65	11.69	*11.84	7.61	*8.89	5.63	-	-	*8.82	5.60	7.53
		-4.5 m	-	-	*17.33	*17.33	*12.94	11.97	*9.46	7.84	-	-	-	-	*8.77	7.39	6.27
Boom :	6.2 m	9.0 m	-	-	-	-	-	-	*6.60	*6.60	-	-	-	-	*5.25	*5.25	6.57
Arm :	3.70 m	7.5 m	-	-	-	-	-	-	-	-	*6.02	*6.02	-	-	*4.76	*4.76	7.89
Shoe :	850 mm	6.0 m	-	-	-	-	-	-	*7.07	*7.07	*6.92	6.40	-	-	*4.57	*4.57	8.77
L/Frame:	LC	4.5 m	-	-	-	-	*9.52	*9.52	*8.19	*8.19	*7.46	6.24	*6.01	4.62	*4.56	4.35	9.32
		3.0 m	-	-	-	-	*12.56	*12.56	*9.68	8.42	*8.23	6.00	*7.41	4.52	*4.68	4.06	9.60
		1.5 m	-	-	-	-	*15.30	12.19	*11.13	7.98	*9.04	5.77	*7.82	4.40	*4.96	3.95	9.65
		0.0 m	-	-	*6.60	*6.60	*16.81	11.67	*12.16	7.66	*9.65	5.58	*8.08	4.30	*5.44	4.01	9.45
		-1.5 m	*6.60	*6.60	*10.58	*10.58	*17.08	11.48	*12.56	7.49	*9.87	5.48	*6.27	4.27	*6.23	4.27	9.00
		-3.0 m	*11.07	*11.07	*15.95	*15.95	*16.29	11.49	*12.18	7.47	*9.44	5.48	-	-	*7.63	4.83	8.26
		-4.5 m	-	-	*19.85	*19.85	*14.29	11.69	*10.69	7.60	-	-	-	-	*8.33	6.03	7.13
		-6.0 m	-	-	-	-	*10.05	*10.05	-	-	-	-	-	-	-	-	5.35
Boom :	6.2 m	9.0 m	-	-	-	-	-	-	-	-	-	-	-	-	*9.20	*9.20	4.72
Arm :	2.55 m	7.5 m	-	-	-	-	-	-	*8.40	*8.40	-	-	-	-	*8.48	*8.48	6.45
Shoe :	850 mm	6.0 m	-	-	-	-	*9.68	*9.68	*8.68	*8.68	-	-	-	-	*8.33	6.70	7.49
L/Frame:	LC	4.5 m	-	-	-	-	*12.07	*12.07	*9.70	9.26	*8.59	6.59	-	-	*8.37	5.80	8.13
Dozer blade down		3.0 m	-	-	-	-	*15.01	13.48	*11.02	8.86	*9.18	6.41	-	-	*8.52	5.36	8.46
		1.5 m	-	-	-	-	*16.93	12.85	*12.15	8.52	*9.75	6.24	-	-	*8.74	5.22	8.51
		0.0 m	-	-	-	-	*17.29	12.63	*12.71	8.32	*10.04	6.12	-	-	*9.00	5.35	8.29
		-1.5 m	-	-	*12.21	*12.21	*16.61	12.63	*12.53	8.26	*9.74	6.10	-	-	*9.27	5.83	7.77
		-3.0 m	-	-	*19.63	*19.63	*14.92	12.78	*11.36	8.35	-	-	-	-	*9.45	6.94	6.89
		-4.5 m	-	-	-	-	*11.53	*11.53	-	-	-	-	-	-	*9.20	*9.20	5.47
Boom :	6.2 m	9.0 m	-	-	-	-	-	-	-	-	-	-	-	-	*6.84	*6.84	5.63
Arm :	3.05 m	7.5 m	-	-	-	-	-	-	*7.59	*7.59	-	-	-	-	*6.09	*6.09	7.13
Shoe :	850 mm	6.0 m	-	-	-	-	-	-	*8.00	*8.00	*7.69	6.79	-	-	*5.82	*5.82	8.09
L/Frame:	LC	4.5 m	-	-	*15.71	*15.71	*11.00	*11.00	*9.08	*9.08	*8.12	6.65	-	-	*5.81	5.26	8.68
Dozer blade down		3.0 m	-	-	-	-	*13.99	13.73	*10.49	8.95	*8.80	6.45	-	-	*5.99	4.90	8.99
		1.5 m	-	-	-	-	*16.33	12.98	*11.77	8.57	*9.48	6.25	*6.78	4.81	*6.39	4.78	9.04
		0.0 m	-	-	-	-	*17.23	12.63	*12.54	8.32	*9.92	6.10	-	-	*7.09	4.88	8.83
		-1.5 m	-	-	*11.23	*11.23	*16.95	12.56	*12.62	8.22	*9.89	6.04	-	-	*8.30	5.25	8.35
		-3.0 m	-	-	*18.61	*18.61	*15.65	12.66	*11.84	8.25	*8.89	6.11	-	-	*8.82	6.08	7.53
		-4.5 m	-	-	*17.33	*17.33	*12.94	12.93	*9.46	8.48	-	-	-	-	*8.77	8.00	6.27
Boom :	6.2 m	9.0 m	-	-	-	-	-	-	*6.60	*6.60	-	-	-	-	*5.25	*5.25	6.57
Arm :	3.70 m	7.5 m	-	-	-	-	-	-	-	-	*6.02	*6.02	-	-	*4.76	*4.76	7.89
Shoe :	850 mm	6.0 m	-	-	-	-	-	-	*7.07	*7.07	*6.92	6.89	-	-	*4.57	*4.57	8.77
L/Frame:	LC	4.5 m	-	-	-	-	*9.52	*9.52	*8.19	*8.19	*7.46	6.72	*6.01	5.01	*4.56	*4.56	9.32
Dozer blade down		3.0 m	-	-	-	-	*12.56	*12.56	*9.68	9.06	*8.23	6.49	*7.41	4.90	*4.68	4.41	9.60
		1.5 m	-	-	-	-	*15.30	13.15	*11.13	8.63	*9.04	6.25	*7.82	4.78	*4.96	4.31	9.65
		0.0 m	-	-	*6.60	*6.60	*16.81	12.63	*12.16	8.31	*9.65	6.07	*8.08	4.69	*5.44	4.37	9.45
		-1.5 m	*6.60	*6.60	*10.58	*10.58	*17.08	12.44	*12.56	8.14	*9.87	5.96	*6.27	4.66	*6.23	4.65	9.00
		-3.0 m	*11.07	*11.07	*15.95	*15.95	*16.29	12.46	*12.18	8.11	*9.44	5.96	-	-	*7.63	5.26	8.26
		-4.5 m	-	-	*19.85	*19.85	*14.29	12.65	*10.69	8.24	-	-	-	-	*8.33	6.54	7.13
		-6.0 m	-	-	-	-	*10.05	*10.05	-	-	-	-	-	-	-	-	5.35

Notes: 1. Machine in “Fine Mode-F” (Power Boost) for lifting capacities.
2. The above loads are in compliance with SAE J1097 and ISO 10567 Hydraulic Excavator Lifting Capacity Standards.
3. Rated loads do not exceed 87% of hydraulic lifting capacity or 75% of tipping load.
4. Rated loads marked with an asterisk (*) are limited by hydraulic capacity rather than tipping load.

Specifications

LIFTING CAPACITY - ECR355EL

At the arm end without bucket.
For Lifting capacity including bucket. simply subtract actual weight of the direct fit bucket or the bucket with quick fit from the following values.
Unit: 1 000 kg.

		Lifting point	1.5 m		3 m		4.5 m		6.0 m		7.5 m		9.0 m		Max. reach		
			Along UC	Across UC	Along UC	Across UC	Along UC	Across UC	Along UC	Across UC	Along UC	Across UC	Along UC	Across UC	Along UC	Across UC	Max. m
Boom :	6.2 m 2 piece boom	9.0 m	-	-	-	-	*11.36	*11.36	-	-	-	-	-	-	*10.22	*10.22	4.83
Arm :	2.55 m	7.5 m	-	-	-	-	*11.52	*11.52	*10.60	9.73	-	-	-	-	*8.91	8.42	6.53
Shoe :	850 mm	6.0 m	-	-	-	-	*12.66	*12.66	*10.80	9.61	*9.00	6.67	-	-	*8.48	6.57	7.56
L/Frame:	LC	4.5 m	-	-	-	-	*14.86	14.45	*11.53	9.25	*9.67	6.56	-	-	*8.48	5.68	8.20
		3.0 m	-	-	-	-	*16.73	13.42	*12.31	8.82	*9.92	6.37	-	-	*8.72	5.25	8.52
		1.5 m	-	-	-	-	*16.29	12.73	*12.68	8.45	*9.97	6.18	-	-	*8.43	5.11	8.57
		0.0 m	-	-	-	-	*15.95	12.51	*12.27	8.24	*9.53	6.06	-	-	*8.06	5.24	8.35
		-1.5 m	-	-	*11.22	*11.22	*13.72	12.53	*10.91	8.19	*8.20	6.05	-	-	*7.45	5.72	7.84
		-3.0 m	-	-	-	-	*10.34	*10.34	*8.27	*8.27	-	-	-	-	*6.28	*6.28	6.97
Boom :	6.2 m 2 piece boom	9.0 m	-	-	-	-	-	-	-	-	-	-	-	-	*7.02	*7.02	5.73
Arm :	3.05 m	7.5 m	-	-	-	-	-	-	*8.89	*8.89	-	-	-	-	*6.19	*6.19	7.21
Shoe :	850 mm	6.0 m	-	-	-	-	*9.24	*9.24	*9.68	9.10	*8.52	6.30	-	-	*5.88	5.43	8.16
L/Frame:	LC	4.5 m	-	-	*20.63	*20.63	*14.04	13.80	*11.08	8.74	*9.37	6.15	-	-	*5.82	4.76	8.75
		3.0 m	-	-	-	-	*16.14	12.74	*12.00	8.28	*9.74	5.93	*6.47	4.46	*5.97	4.41	9.05
		1.5 m	-	-	-	-	*17.16	11.92	*12.57	7.87	*9.94	5.72	*7.37	4.37	*6.31	4.30	9.10
		0.0 m	-	-	-	-	*16.57	11.55	*12.45	7.60	*9.71	5.56	-	-	*6.93	4.39	8.89
		-1.5 m	-	-	*10.43	*10.43	*14.74	11.48	*11.43	7.49	*8.78	5.50	-	-	*7.05	4.73	8.41
		-3.0 m	-	-	-	-	*11.75	11.60	*9.29	7.55	*6.44	5.59	-	-	*6.14	5.49	7.61
Boom :	6.2 m 2 piece boom	9.0 m	-	-	-	-	*6.92	*6.92	-	-	-	-	-	-	*6.78	*6.78	4.55
Arm :	3.70 m	7.5 m	-	-	-	-	-	-	*6.90	*6.90	-	-	-	-	*5.38	*5.38	6.67
Shoe :	850 mm	6.0 m	-	-	-	-	-	-	*7.21	*7.21	*6.33	*6.33	-	-	*4.85	*4.85	7.98
L/Frame:	LC	4.5 m	-	-	-	-	-	-	*7.53	*7.53	*7.39	6.41	-	-	*4.62	*4.62	8.85
		3.0 m	-	-	*9.14	*9.14	*9.29	*9.29	*9.12	8.90	*8.51	6.23	*6.33	4.59	*4.57	4.25	9.39
		1.5 m	-	-	-	-	*15.15	13.09	*11.45	8.41	*9.39	5.98	*7.64	4.48	*4.67	3.96	9.68
		0.0 m	-	-	-	-	*16.77	12.11	*12.27	7.93	*9.76	5.73	*8.05	4.35	*4.91	3.86	9.72
		-1.5 m	-	-	*5.85	*5.85	*16.90	11.55	*12.48	7.59	*9.77	5.53	*7.78	4.25	*5.33	3.92	9.53
		-3.0 m	-	-	*9.87	*9.87	*15.68	11.35	*11.87	7.41	*9.21	5.42	*6.83	4.22	*6.04	4.18	9.08
		-4.5 m	-	-	*15.31	*15.31	*13.25	11.39	*10.26	7.40	*7.72	5.42	-	-	*6.02	4.73	8.34
		-6.0 m	-	-	-	-	*9.37	*9.37	*7.20	*7.20	-	-	-	-	-	-	7.22
Boom :	6.2 m 2 piece boom	9.0 m	-	-	-	-	*11.36	*11.36	-	-	-	-	-	-	*10.22	*10.22	4.83
Arm :	2.55 m	7.5 m	-	-	-	-	*11.52	*11.52	*10.60	9.73	-	-	-	-	*8.91	8.42	6.53
Shoe :	850 mm	6.0 m	-	-	-	-	*12.66	*12.66	*10.80	9.61	*9.00	6.67	-	-	*8.48	6.57	7.56
L/Frame:	LC	4.5 m	-	-	-	-	*14.86	14.45	*11.53	9.25	*9.67	6.56	-	-	*8.48	5.68	8.20
Dozer blade down		3.0 m	-	-	-	-	*16.73	13.42	*12.31	8.82	*9.92	6.37	-	-	*8.72	5.25	8.52
		1.5 m	-	-	-	-	*16.29	12.73	*12.68	8.45	*9.97	6.18	-	-	*8.43	5.11	8.57
		0.0 m	-	-	-	-	*15.95	12.51	*12.27	8.24	*9.53	6.06	-	-	*8.06	5.24	8.35
		-1.5 m	-	-	*11.22	*11.22	*13.72	12.53	*10.91	8.19	*8.20	6.05	-	-	*7.45	5.72	7.84
		-3.0 m	-	-	-	-	*10.34	*10.34	*8.27	*8.27	-	-	-	-	*6.28	*6.28	6.97
Boom :	6.2 m 2 piece boom	9.0 m	-	-	-	-	-	-	-	-	-	-	-	-	*7.02	*7.02	5.73
Arm :	3.05 m	7.5 m	-	-	-	-	-	-	*8.89	*8.89	-	-	-	-	*6.19	*6.19	7.21
Shoe :	850 mm	6.0 m	-	-	-	-	*9.24	*9.24	*9.68	*9.68	*8.52	6.78	-	-	*5.88	5.86	8.16
L/Frame:	LC	4.5 m	-	-	*20.63	*20.63	*14.04	*14.04	*11.08	9.38	*9.37	6.64	-	-	*5.82	5.16	8.75
Dozer blade down		3.0 m	-	-	-	-	*16.14	13.70	*12.00	8.92	*9.74	6.42	*6.47	4.84	*5.97	4.80	9.05
		1.5 m	-	-	-	-	*17.16	12.88	*12.57	8.51	*9.94	6.20	*7.37	4.76	*6.31	4.68	9.10
		0.0 m	-	-	-	-	*16.57	12.51	*12.45	8.24	*9.71	6.04	-	-	*6.93	4.78	8.89
		-1.5 m	-	-	*10.43	*10.43	*14.74	12.44	*11.43	8.14	*8.78	5.98	-	-	*7.05	5.15	8.41
		-3.0 m	-	-	-	-	*11.75	*11.75	*9.29	8.19	*6.44	6.07	-	-	*6.14	5.96	7.61
Boom :	6.2 m 2 piece boom	9.0 m	-	-	-	-	*6.92	*6.92	-	-	-	-	-	-	*6.78	*6.78	4.55
Arm :	3.70 m	7.5 m	-	-	-	-	-	-	*6.90	*6.90	-	-	-	-	*5.38	*5.38	6.67
Shoe :	850 mm	6.0 m	-	-	-	-	-	-	*7.21	*7.21	*6.33	*6.33	-	-	*4.85	*4.85	7.98
L/Frame:	LC	4.5 m	-	-	-	-	-	-	*7.53	*7.53	*7.39	6.90	-	-	*4.62	*4.62	8.85
Dozer blade down		3.0 m	-	-	*9.14	*9.14	*9.29	*9.29	*9.12	*9.12	*8.51	6.71	*6.33	4.98	*4.57	*4.57	9.39
		1.5 m	-	-	-	-	*15.15	14.05	*11.45	9.05	*9.39	6.46	*7.64	4.87	*4.67	4.32	9.68
		0.0 m	-	-	-	-	*16.77	13.07	*12.27	8.58	*9.76	6.21	*8.05	4.74	*4.91	4.21	9.72
		-1.5 m	-	-	*5.85	*5.85	*16.90	12.51	*12.48	8.23	*9.77	6.01	*7.78	4.64	*5.33	4.28	9.53
		-3.0 m	-	-	*9.87	*9.87	*15.68	12.32	*11.87	8.05	*9.21	5.90	*6.83	4.61	*6.04	4.56	9.08
		-4.5 m	-	-	*15.31	*15.31	*13.25	12.35	*10.26	8.04	*7.72	5.91	-	-	*6.02	5.15	8.34
		-6.0 m	-	-	-	-	*9.37	*9.37	*7.20	*7.20	-	-	-	-	-	-	7.22

Notes: 1. Machine in “Fine Mode-F” (Power Boost) for lifting capacities.
2. The above loads are in compliance with SAE J1097 and ISO 10567 Hydraulic Excavator Lifting Capacity Standards.
3. Rated loads do not exceed 87% of hydraulic lifting capacity or 75% of tipping load.
4. Rated loads marked with an asterisk (*) are limited by hydraulic capacity rather than tipping load.

LIFTING CAPACITY - ECR355ENL

At the arm end without bucket.
For Lifting capacity including bucket. simply subtract actual weight of the direct fit bucket or the bucket with quick fit from the following values.
Unit: 1 000 kg.

		Lifting point	1.5 m		3 m		4.5 m		6.0 m		7.5 m		9.0 m		Max. reach		
			Along UC	Across UC	Along UC	Across UC	Along UC	Across UC	Along UC	Across UC	Along UC	Across UC	Along UC	Across UC	Along UC	Across UC	Max. m
Boom :	6.2 m	9.0 m	-	-	-	-	-	-	-	-	-	-	-	-	*9.20	*9.20	4.72
Arm :	2.55 m	7.5 m	-	-	-	-	-	-	*8.40	*8.40	-	-	-	-	*8.48	8.25	6.45
Shoe :	600 mm	6.0 m	-	-	-	-	*9.68	*9.68	*8.68	*8.68	-	-	-	-	*8.33	6.41	7.49
L/Frame:	NLC	4.5 m	-	-	-	-	*12.07	*12.07	*9.70	8.88	*8.59	6.31	-	-	*8.37	5.54	8.13
Dozer blade down		3.0 m	-	-	-	-	*15.01	12.91	*11.02	8.48	*9.18	6.13	-	-	*8.52	5.11	8.46
		1.5 m	-	-	-	-	*16.93	12.28	*12.15	8.14	*9.75	5.95	-	-	*8.74	4.97	8.51
		0.0 m	-	-	-	-	*17.29	12.06	*12.71	7.94	*10.04	5.84	-	-	*9.00	5.10	8.29
		-1.5 m	-	-	*12.21	*12.21	*16.61	12.06	*12.53	7.88	*9.74	5.81	-	-	*9.27	5.56	7.77
		-3.0 m	-	-	*19.63	*19.63	*14.92	12.21	*11.36	7.97	-	-	-	-	*9.45	6.62	6.89
		-4.5 m	-	-	-	-	*11.53	*11.53	-	-	-	-	-	-	*9.20	*9.20	5.47
Boom :	6.2 m	9.0 m	-	-	-	-	-	-	-	-	-	-	-	-	*6.84	*6.84	5.63
Arm :	3.05 m	7.5 m	-	-	-	-	-	-	*7.59	*7.59	-	-	-	-	*6.09	*6.09	7.13
Shoe :	600 mm	6.0 m	-	-	-	-	-	-	*8.00	*8.00	*7.69	6.50	-	-	*5.82	5.72	8.09
L/Frame:	NLC	4.5 m	-	-	*15.71	*15.71	*11.00	*11.00	*9.08	8.99	*8.12	6.37	-	-	*5.81	5.02	8.68
Dozer blade down		3.0 m	-	-	-	-	*13.99	13.16	*10.49	8.57	*8.80	6.16	-	-	*5.99	4.67	8.99
		1.5 m	-	-	-	-	*16.33	12.41	*11.77	8.19	*9.48	5.96	*6.78	4.58	*6.39	4.55	9.04
		0.0 m	-	-	-	-	*17.23	12.06	*12.54	7.94	*9.92	5.82	-	-	*7.09	4.64	8.83
		-1.5 m	-	-	*11.23	*11.23	*16.95	11.99	*12.62	7.84	*9.89	5.76	-	-	*8.30	5.00	8.35
		-3.0 m	-	-	*18.61	*18.61	*15.65	12.08	*11.84	7.87	*8.89	5.83	-	-	*8.82	5.79	7.53
		-4.5 m	-	-	*17.33	*17.33	*12.94	12.36	*9.46	8.10	-	-	-	-	*8.77	7.64	6.27
Boom :	6.2 m	9.0 m	-	-	-	-	-	-	*6.60	*6.60	-	-	-	-	*5.25	*5.25	6.57
Arm :	3.70 m	7.5 m	-	-	-	-	-	-	-	-	*6.02	*6.02	-	-	*4.76	*4.76	7.89
Shoe :	600 mm	6.0 m	-	-	-	-	-	-	*7.07	*7.07	*6.92	6.60	-	-	*4.57	*4.57	8.77
L/Frame:	NLC	4.5 m	-	-	-	-	*9.52	*9.52	*8.19	*8.19	*7.46	6.43	*6.01	4.78	*4.56	4.50	9.32
Dozer blade down		3.0 m	-	-	-	-	*12.56	*12.56	*9.68	8.68	*8.23	6.20	*7.41	4.67	*4.68	4.20	9.60
		1.5 m	-	-	-	-	*15.30	12.58	*11.13	8.24	*9.04	5.97	*7.82	4.55	*4.96	4.09	9.65
		0.0 m	-	-	*6.60	*6.60	*16.81	12.06	*12.16	7.92	*9.65	5.78	*8.08	4.46	*5.44	4.16	9.45
		-1.5 m	*6.60	*6.60	*10.58	*10.58	*17.08	11.87	*12.56	7.76	*9.87	5.67	*6.27	4.43	*6.23	4.42	9.00
		-3.0 m	*11.07	*11.07	*15.95	*15.95	*16.29	11.89	*12.18	7.73	*9.44	5.67	-	-	*7.63	5.00	8.26
		-4.5 m	-	-	*19.85	*19.85	*14.29	12.08	*10.69	7.86	-	-	-	-	*8.33	6.24	7.13
		-6.0 m	-	-	-	-	*10.05	*10.05	-	-	-	-	-	-	-	-	5.35
Boom :	6.2 m 2 piece boom	9.0 m	-	-	-	-	*11.36	*11.36	-	-	-	-	-	-	*10.22	*10.22	4.83
Arm :	2.55 m	7.5 m	-	-	-	-	*11.52	*11.52	*10.60	9.35	-	-	-	-	*8.91	8.08	6.53
Shoe :	600 mm	6.0 m	-	-	-	-	*12.66	*12.66	*10.80	9.22	*9.00	6.38	-	-	*8.48	6.28	7.56
L/Frame:	NLC	4.5 m	-	-	-	-	*14.86	13.88	*11.53	8.87	*9.67	6.28	-	-	*8.48	5.43	8.20
Dozer blade down		3.0 m	-	-	-	-	*16.73	12.85	*12.31	8.44	*9.92	6.08	-	-	*8.72	5.00	8.52
		1.5 m	-	-	-	-	*16.29	12.16	*12.68	8.07	*9.97	5.89	-	-	*8.43	4.87	8.57
		0.0 m	-	-	-	-	*15.95	11.94	*12.27	7.86	*9.53	5.77	-	-	*8.06	4.99	8.35
		-1.5 m	-	-	*11.22	*11.22	*13.72	11.95	*10.91	7.80	*8.20	5.76	-	-	*7.45	5.44	7.84
		-3.0 m	-	-	-	-	*10.34	*10.34	*8.27	7.91	-	-	-	-	*6.28	*6.28	6.97
Boom :	6.2 m 2 piece boom	9.0 m	-	-	-	-	-	-	-	-	-	-	-	-	*7.02	*7.02	5.73
Arm :	3.05 m	7.5 m	-	-	-	-	-	-	*8.89	*8.89	-	-	-	-	*6.19	*6.19	7.21
Shoe :	600 mm	6.0 m	-	-	-	-	*9.24	*9.24	*9.68	9.37	*8.52	6.50	-	-	*5.88	5.60	8.16
L/Frame:	NLC	4.5 m	-	-	*20.63	*20.63	*14.04	*14.04	*11.08	9.00	*9.37	6.35	-	-	*5.82	4.92	8.75
Dozer blade down		3.0 m	-	-	-	-	*16.14	13.13	*12.00	8.54	*9.74	6.13	*6.47	4.61	*5.97	4.57	9.05
		1.5 m	-	-	-	-	*17.16	12.31	*12.57	8.13	*9.94	5.91	*7.37	4.53	*6.31	4.45	9.10
		0.0 m	-	-	-	-	*16.57	11.94	*12.45	7.86	*9.71	5.76	-	-	*6.93	4.55	8.89
		-1.5 m	-	-	*10.43	*10.43	*14.74	11.87	*11.43	7.75	*8.78	5.70	-	-	*7.05	4.90	8.41
		-3.0 m	-	-	-	-	*11.75	*11.75	*9.29	7.81	*6.44	5.78	-	-	*6.14	5.68	7.61
Boom :	6.2 m 2 piece boom	9.0 m	-	-	-	-	*6.92	*6.92	-	-	-	-	-	-	*6.78	*6.78	4.55
Arm :	3.70 m	7.5 m	-	-	-	-	-	-	*6.90	*6.90	-	-	-	-	*5.38	*5.38	6.67
Shoe :	600 mm	6.0 m	-	-	-	-	-	-	*7.21	*7.21	*6.33	*6.33	-	-	*4.85	*4.85	7.98
L/Frame:	NLC	4.5 m	-	-	-	-	-	-	*7.53	*7.53	*7.39	6.61	-	-	*4.62	*4.62	8.85
Dozer blade down		3.0 m	-	-	*9.14	*9.14	*9.29	*9.29	*9.12	*9.12	*8.51	6.43	*6.33	4.75	*4.57	4.40	9.39
		1.5 m	-	-	-	-	*15.15	13.48	*11.45	8.67	*9.39	6.18	*7.64	4.64	*4.67	4.11	9.68
		0.0 m	-	-	-	-	*16.77	12.50	*12.27	8.19	*9.76	5.92	*8.05	4.51	*4.91	4.00	9.72
		-1.5 m	-	-	*5.85	*5.85	*16.90	11.94	*12.48	7.85	*9.77	5.72	*7.78	4.41	*5.33	4.07	9.53
		-3.0 m	-	-	*9.87	*9.87	*15.68	11.74	*11.87	7.67	*9.21	5.61	*6.83	4.38	*6.04	4.33	9.08
		-4.5 m	-	-	*15.31	*15.31	*13.25	11.78	*10.26	7.66	*7.72	5.62	-	-	*6.02	4.90	8.34
		-6.0 m	-	-	-	-	*9.37	*9.37	*7.20	*7.20	-	-	-	-	-	-	7.22

Notes: 1. Machine in “Fine Mode-F” (Power Boost) for lifting capacities.
2. The above loads are in compliance with SAE J1097 and ISO 10567 Hydraulic Excavator Lifting Capacity Standards.
3. Rated loads do not exceed 87% of hydraulic lifting capacity or 75% of tipping load.
4. Rated loads marked with an asterisk (*) are limited by hydraulic capacity rather than tipping load.

Specifications

LIFTING CAPACITY - ECR355ENL

At the arm end without bucket.
For Lifting capacity including bucket. simply subtract actual weight of the direct fit bucket or the bucket with quick fit from the following values.
Unit: 1 000 kg.

		Lifting point	1.5 m		3 m		4.5 m		6.0 m		7.5 m		9.0 m		Max. reach		
			Along UC	Across UC	Along UC	Across UC	Along UC	Across UC	Along UC	Across UC	Along UC	Across UC	Along UC	Across UC	Along UC	Across UC	Max. m
Boom :	6.2 m	9.0 m	-	-	-	-	-	-	-	-	-	-	-	-	*9.20	*9.20	4.72
Arm :	2.55 m	7.5 m	-	-	-	-	-	-	*8.40	*8.40	-	-	-	-	*8.48	8.41	6.45
Shoe :	700 mm	6.0 m	-	-	-	-	*9.68	*9.68	*8.68	*8.68	-	-	-	-	*8.33	6.54	7.49
L/Frame:	NLC	4.5 m	-	-	-	-	*12.07	*12.07	*9.70	9.05	*8.59	6.44	-	-	*8.37	5.66	8.13
Dozer blade down		3.0 m	-	-	-	-	*15.01	13.17	*11.02	8.65	*9.18	6.26	-	-	*8.52	5.22	8.46
		1.5 m	-	-	-	-	*16.93	12.54	*12.15	8.31	*9.75	6.08	-	-	*8.74	5.08	8.51
		0.0 m	-	-	-	-	*17.29	12.32	*12.71	8.11	*10.04	5.97	-	-	*9.00	5.21	8.29
		-1.5 m	-	-	*12.21	*12.21	*16.61	12.32	*12.53	8.05	*9.74	5.94	-	-	*9.27	5.68	7.77
		-3.0 m	-	-	*19.63	*19.63	*14.92	12.47	*11.36	8.14	-	-	-	-	*9.45	6.76	6.89
		-4.5 m	-	-	-	-	*11.53	*11.53	-	-	-	-	-	-	*9.20	*9.20	5.47
Boom :	6.2 m	9.0 m	-	-	-	-	-	-	-	-	-	-	-	-	*6.84	*6.84	5.63
Arm :	3.05 m	7.5 m	-	-	-	-	-	-	*7.59	*7.59	-	-	-	-	*6.09	*6.09	7.13
Shoe :	700 mm	6.0 m	-	-	-	-	-	-	*8.00	*8.00	*7.69	6.63	-	-	*5.82	*5.82	8.09
L/Frame:	NLC	4.5 m	-	-	*15.71	*15.71	*11.00	*11.00	*9.08	*9.08	*8.12	6.50	-	-	*5.81	5.13	8.68
Dozer blade down		3.0 m	-	-	-	-	*13.99	13.42	*10.49	8.75	*8.80	6.29	-	-	*5.99	4.77	8.99
		1.5 m	-	-	-	-	*16.33	12.67	*11.77	8.36	*9.48	6.09	*6.78	4.68	*6.39	4.65	9.04
		0.0 m	-	-	-	-	*17.23	12.32	*12.54	8.11	*9.92	5.95	-	-	*7.09	4.75	8.83
		-1.5 m	-	-	*11.23	*11.23	*16.95	12.25	*12.62	8.01	*9.89	5.89	-	-	*8.30	5.11	8.35
		-3.0 m	-	-	*18.61	*18.61	*15.65	12.34	*11.84	8.05	*8.89	5.96	-	-	*8.82	5.92	7.53
		-4.5 m	-	-	*17.33	*17.33	*12.94	12.62	*9.46	8.27	-	-	-	-	*8.77	7.80	6.27
Boom :	6.2 m	9.0 m	-	-	-	-	-	-	*6.60	*6.60	-	-	-	-	*5.25	*5.25	6.57
Arm :	3.70 m	7.5 m	-	-	-	-	-	-	-	-	*6.02	*6.02	-	-	*4.76	*4.76	7.89
Shoe :	700 mm	6.0 m	-	-	-	-	-	-	*7.07	*7.07	*6.92	6.73	-	-	*4.57	*4.57	8.77
L/Frame:	NLC	4.5 m	-	-	-	-	*9.52	*9.52	*8.19	*8.19	*7.46	6.56	*6.01	4.88	*4.56	*4.56	9.32
Dozer blade down		3.0 m	-	-	-	-	*12.56	*12.56	*9.68	8.85	*8.23	6.33	*7.41	4.78	*4.68	4.30	9.60
		1.5 m	-	-	-	-	*15.30	12.84	*11.13	8.42	*9.04	6.10	*7.82	4.66	*4.96	4.19	9.65
		0.0 m	-	-	*6.60	*6.60	*16.81	12.32	*12.16	8.10	*9.65	5.91	*8.08	4.56	*5.44	4.26	9.45
		-1.5 m	*6.60	*6.60	*10.58	*10.58	*17.08	12.13	*12.56	7.93	*9.87	5.80	*6.27	4.53	*6.23	4.53	9.00
		-3.0 m	*11.07	*11.07	*15.95	*15.95	*16.29	12.14	*12.18	7.90	*9.44	5.80	-	-	*7.63	5.12	8.26
		-4.5 m	-	-	*19.85	*19.85	*14.29	12.34	*10.69	8.03	-	-	-	-	*8.33	6.37	7.13
		-6.0 m	-	-	-	-	*10.05	*10.05	-	-	-	-	-	-	-	-	5.35
Boom :	6.2 m 2 piece boom	9.0 m	-	-	-	-	*11.36	*11.36	-	-	-	-	-	-	*10.22	*10.22	4.83
Arm :	2.55 m	7.5 m	-	-	-	-	*11.52	*11.52	*10.60	9.52	-	-	-	-	*8.91	8.23	6.53
Shoe :	700 mm	6.0 m	-	-	-	-	*12.66	*12.66	*10.80	9.40	*9.00	6.51	-	-	*8.48	6.41	7.56
L/Frame:	NLC	4.5 m	-	-	-	-	*14.86	14.14	*11.53	9.05	*9.67	6.41	-	-	*8.48	5.54	8.20
Dozer blade down		3.0 m	-	-	-	-	*16.73	13.10	*12.31	8.61	*9.92	6.21	-	-	*8.72	5.11	8.52
		1.5 m	-	-	-	-	*16.29	12.42	*12.68	8.24	*9.97	6.02	-	-	*8.43	4.98	8.57
		0.0 m	-	-	-	-	*15.95	12.20	*12.27	8.03	*9.53	5.90	-	-	*8.06	5.11	8.35
		-1.5 m	-	-	*11.22	*11.22	*13.72	12.21	*10.91	7.98	*8.20	5.89	-	-	*7.45	5.57	7.84
		-3.0 m	-	-	-	-	*10.34	*10.34	*8.27	8.09	-	-	-	-	*6.28	*6.28	6.97
Boom :	6.2 m 2 piece boom	9.0 m	-	-	-	-	-	-	-	-	-	-	-	-	*7.02	*7.02	5.73
Arm :	3.05 m	7.5 m	-	-	-	-	-	-	*8.89	*8.89	-	-	-	-	*6.19	*6.19	7.21
Shoe :	700 mm	6.0 m	-	-	-	-	*9.24	*9.24	*9.68	9.54	*8.52	6.63	-	-	*5.88	5.72	8.16
L/Frame:	NLC	4.5 m	-	-	*20.63	*20.63	*14.04	*14.04	*11.08	9.17	*9.37	6.48	-	-	*5.82	5.03	8.75
Dozer blade down		3.0 m	-	-	-	-	*16.14	13.39	*12.00	8.72	*9.74	6.26	*6.47	4.72	*5.97	4.67	9.05
		1.5 m	-	-	-	-	*17.16	12.57	*12.57	8.30	*9.94	6.04	*7.37	4.63	*6.31	4.56	9.10
		0.0 m	-	-	-	-	*16.57	12.20	*12.45	8.03	*9.71	5.89	-	-	*6.93	4.65	8.89
		-1.5 m	-	-	*10.43	*10.43	*14.74	12.13	*11.43	7.93	*8.78	5.83	-	-	*7.05	5.01	8.41
		-3.0 m	-	-	-	-	*11.75	*11.75	*9.29	7.98	*6.44	5.91	-	-	*6.14	5.81	7.61
Boom :	6.2 m 2 piece boom	9.0 m	-	-	-	-	*6.92	*6.92	-	-	-	-	-	-	*6.78	*6.78	4.55
Arm :	3.70 m	7.5 m	-	-	-	-	-	-	*6.90	*6.90	-	-	-	-	*5.38	*5.38	6.67
Shoe :	700 mm	6.0 m	-	-	-	-	-	-	*7.21	*7.21	*6.33	*6.33	-	-	*4.85	*4.85	7.98
L/Frame:	NLC	4.5 m	-	-	-	-	-	-	*7.53	*7.53	*7.39	6.74	-	-	*4.62	*4.62	8.85
Dozer blade down		3.0 m	-	-	*9.14	*9.14	*9.29	*9.29	*9.12	*9.12	*8.51	6.56	*6.33	4.85	*4.57	4.50	9.39
		1.5 m	-	-	-	-	*15.15	13.74	*11.45	8.84	*9.39	6.31	*7.64	4.74	*4.67	4.20	9.68
		0.0 m	-	-	-	-	*16.77	12.76	*12.27	8.37	*9.76	6.05	*8.05	4.61	*4.91	4.10	9.72
		-1.5 m	-	-	*5.85	*5.85	*16.90	12.20	*12.48	8.02	*9.77	5.85	*7.78	4.51	*5.33	4.16	9.53
		-3.0 m	-	-	*9.87	*9.87	*15.68	12.00	*11.87	7.85	*9.21	5.74	*6.83	4.48	*6.04	4.43	9.08
		-4.5 m	-	-	*15.31	*15.31	*13.25	12.04	*10.26	7.83	*7.72	5.75	-	-	*6.02	5.02	8.34
		-6.0 m	-	-	-	-	*9.37	*9.37	*7.20	*7.20	-	-	-	-	-	-	7.22

Notes: 1. Machine in “Fine Mode-F” (Power Boost) for lifting capacities.
2. The above loads are in compliance with SAE J1097 and ISO 10567 Hydraulic Excavator Lifting Capacity Standards.
3. Rated loads do not exceed 87% of hydraulic lifting capacity or 75% of tipping load.
4. Rated loads marked with an asterisk (*) are limited by hydraulic capacity rather than tipping load.

LIFTING CAPACITY - ECR355ENL

At the arm end without bucket.
For Lifting capacity including bucket. simply subtract actual weight of the direct fit bucket or the bucket with quick fit from the following values.
Unit: 1 000 kg.

		Lifting point	1.5 m		3 m		4.5 m		6.0 m		7.5 m		9.0 m		Max. reach		
			Along UC	Across UC	Along UC	Across UC	Along UC	Across UC	Along UC	Across UC	Along UC	Across UC	Along UC	Across UC	Along UC	Across UC	Max. m
Boom :	6.2 m	9.0 m	-	-	-	-	-	-	-	-	-	-	-	-	*9.20	*9.20	4.72
Arm :	2.55 m	7.5 m	-	-	-	-	-	-	*8.40	*8.40	-	-	-	-	*8.48	*8.48	6.45
Shoe :	800 mm	6.0 m	-	-	-	-	*9.68	*9.68	*8.68	*8.68	-	-	-	-	*8.33	6.61	7.49
L/Frame:	NLC	4.5 m	-	-	-	-	*12.07	*12.07	*9.70	9.15	*8.59	6.51	-	-	*8.37	5.72	8.13
Dozer blade down		3.0 m	-	-	-	-	*15.01	13.31	*11.02	8.75	*9.18	6.33	-	-	*8.52	5.28	8.46
		1.5 m	-	-	-	-	*16.93	12.68	*12.15	8.41	*9.75	6.15	-	-	*8.74	5.14	8.51
		0.0 m	-	-	-	-	*17.29	12.46	*12.71	8.21	*10.04	6.04	-	-	*9.00	5.27	8.29
		-1.5 m	-	-	*12.21	*12.21	*16.61	12.46	*12.53	8.15	*9.74	6.02	-	-	*9.27	5.75	7.77
		-3.0 m	-	-	*19.63	*19.63	*14.92	12.61	*11.36	8.24	-	-	-	-	*9.45	6.84	6.89
		-4.5 m	-	-	-	-	*11.53	*11.53	-	-	-	-	-	-	*9.20	*9.20	5.47
Boom :	6.2 m	9.0 m	-	-	-	-	-	-	-	-	-	-	-	-	*6.84	*6.84	5.63
Arm :	3.05 m	7.5 m	-	-	-	-	-	-	*7.59	*7.59	-	-	-	-	*6.09	*6.09	7.13
Shoe :	800 mm	6.0 m	-	-	-	-	-	-	*8.00	*8.00	*7.69	6.71	-	-	*5.82	*5.82	8.09
L/Frame:	NLC	4.5 m	-	-	*15.71	*15.71	*11.00	*11.00	*9.08	*9.08	*8.12	6.57	-	-	*5.81	5.19	8.68
Dozer blade down		3.0 m	-	-	-	-	*13.99	13.56	*10.49	8.84	*8.80	6.37	-	-	*5.99	4.83	8.99
		1.5 m	-	-	-	-	*16.33	12.81	*11.77	8.46	*9.48	6.17	*6.78	4.74	*6.39	4.71	9.04
		0.0 m	-	-	-	-	*17.23	12.46	*12.54	8.21	*9.92	6.02	-	-	*7.09	4.81	8.83
		-1.5 m	-	-	*11.23	*11.23	*16.95	12.39	*12.62	8.10	*9.89	5.96	-	-	*8.30	5.18	8.35
		-3.0 m	-	-	*18.61	*18.61	*15.65	12.48	*11.84	8.14	*8.89	6.03	-	-	*8.82	5.99	7.53
		-4.5 m	-	-	*17.33	*17.33	*12.94	12.76	*9.46	8.36	-	-	-	-	*8.77	7.89	6.27
Boom :	6.2 m	9.0 m	-	-	-	-	-	-	*6.60	*6.60	-	-	-	-	*5.25	*5.25	6.57
Arm :	3.70 m	7.5 m	-	-	-	-	-	-	-	-	*6.02	*6.02	-	-	*4.76	*4.76	7.89
Shoe :	800 mm	6.0 m	-	-	-	-	-	-	*7.07	*7.07	*6.92	6.80	-	-	*4.57	*4.57	8.77
L/Frame:	NLC	4.5 m	-	-	-	-	*9.52	*9.52	*8.19	*8.19	*7.46	6.63	*6.01	4.94	*4.56	*4.56	9.32
Dozer blade down		3.0 m	-	-	-	-	*12.56	*12.56	*9.68	8.95	*8.23	6.40	*7.41	4.83	*4.68	4.35	9.60
		1.5 m	-	-	-	-	*15.30	12.98	*11.13	8.51	*9.04	6.17	*7.82	4.71	*4.96	4.24	9.65
		0.0 m	-	-	*6.60	*6.60	*16.81	12.46	*12.16	8.19	*9.65	5.98	*8.08	4.62	*5.44	4.31	9.45
		-1.5 m	*6.60	*6.60	*10.58	*10.58	*17.08	12.27	*12.56	8.02	*9.87	5.87	*6.27	4.59	*6.23	4.58	9.00
		-3.0 m	*11.07	*11.07	*15.95	*15.95	*16.29	12.28	*12.18	8.00	*9.44	5.87	-	-	*7.63	5.18	8.26
		-4.5 m	-	-	*19.85	*19.85	*14.29	12.48	*10.69	8.13	-	-	-	-	*8.33	6.45	7.13
		-6.0 m	-	-	-	-	*10.05	*10.05	-	-	-	-	-	-	-	-	5.35
Boom :	6.2 m 2 piece boom	9.0 m	-	-	-	-	*11.36	*11.36	-	-	-	-	-	-	*10.22	*10.22	4.83
Arm :	2.55 m	7.5 m	-	-	-	-	*11.52	*11.52	*10.60	9.62	-	-	-	-	*8.91	8.32	6.53
Shoe :	800 mm	6.0 m	-	-	-	-	*12.66	*12.66	*10.80	9.49	*9.00	6.58	-	-	*8.48	6.48	7.56
L/Frame:	NLC	4.5 m	-	-	-	-	*14.86	14.28	*11.53	9.14	*9.67	6.48	-	-	*8.48	5.61	8.20
Dozer blade down		3.0 m	-	-	-	-	*16.73	13.25	*12.31	8.71	*9.92	6.28	-	-	*8.72	5.17	8.52
		1.5 m	-	-	-	-	*16.29	12.56	*12.68	8.34	*9.97	6.10	-	-	*8.43	5.04	8.57
		0.0 m	-	-	-	-	*15.95	12.34	*12.27	8.12	*9.53	5.97	-	-	*8.06	5.17	8.35
		-1.5 m	-	-	*11.22	*11.22	*13.72	12.35	*10.91	8.07	*8.20	5.96	-	-	*7.45	5.63	7.84
		-3.0 m	-	-	-	-	*10.34	*10.34	*8.27	8.18	-	-	-	-	*6.28	*6.28	6.97
Boom :	6.2 m 2 piece boom	9.0 m	-	-	-	-	-	-	-	-	-	-	-	-	*7.02	*7.02	5.73
Arm :	3.05 m	7.5 m	-	-	-	-	-	-	*8.89	*8.89	-	-	-	-	*6.19	*6.19	7.21
Shoe :	800 mm	6.0 m	-	-	-	-	*9.24	*9.24	*9.68	9.63	*8.52	6.70	-	-	*5.88	5.78	8.16
L/Frame:	NLC	4.5 m	-	-	*20.63	*20.63	*14.04	*14.04	*11.08	9.27	*9.37	6.55	-	-	*5.82	5.09	8.75
Dozer blade down		3.0 m	-	-	-	-	*16.14	13.53	*12.00	8.81	*9.74	6.33	*6.47	4.78	*5.97	4.73	9.05
		1.5 m	-	-	-	-	*17.16	12.71	*12.57	8.40	*9.94	6.11	*7.37	4.69	*6.31	4.61	9.10
		0.0 m	-	-	-	-	*16.57	12.34	*12.45	8.13	*9.71	5.96	-	-	*6.93	4.71	8.89
		-1.5 m	-	-	*10.43	*10.43	*14.74	12.27	*11.43	8.02	*8.78	5.90	-	-	*7.05	5.08	8.41
		-3.0 m	-	-	-	-	*11.75	*11.75	*9.29	8.07	*6.44	5.98	-	-	*6.14	5.88	7.61
Boom :	6.2 m 2 piece boom	9.0 m	-	-	-	-	*6.92	*6.92	-	-	-	-	-	-	*6.78	*6.78	4.55
Arm :	3.70 m	7.5 m	-	-	-	-	-	-	*6.90	*6.90	-	-	-	-	*5.38	*5.38	6.67
Shoe :	800 mm	6.0 m	-	-	-	-	-	-	*7.21	*7.21	*6.33	*6.33	-	-	*4.85	*4.85	7.98
L/Frame:	NLC	4.5 m	-	-	-	-	-	-	*7.53	*7.53	*7.39	6.81	-	-	*4.62	*4.62	8.85
Dozer blade down		3.0 m	-	-	*9.14	*9.14	*9.29	*9.29	*9.12	*9.12	*8.51	6.63	*6.33	4.91	*4.57	4.55	9.39
		1.5 m	-	-	-	-	*15.15	13.88	*11.45	8.94	*9.39	6.38	*7.64	4.80	*4.67	4.26	9.68
		0.0 m	-	-	-	-	*16.77	12.90	*12.27	8.46	*9.76	6.12	*8.05	4.67	*4.91	4.15	9.72
		-1.5 m	-	-	*5.85	*5.85	*16.90	12.34	*12.48	8.12	*9.77	5.92	*7.78	4.57	*5.33	4.22	9.53
		-3.0 m	-	-	*9.87	*9.87	*15.68	12.14	*11.87	7.94	*9.21	5.81	*6.83	4.54	*6.04	4.49	9.08
		-4.5 m	-	-	*15.31	*15.31	*13.25	12.18	*10.26	7.92	*7.72	5.82	-	-	*6.02	5.08	8.34
		-6.0 m	-	-	-	-	*9.37	*9.37	*7.20	*7.20	-	-	-	-	-	-	7.22

Notes: 1. Machine in “Fine Mode-F” (Power Boost) for lifting capacities.
2. The above loads are in compliance with SAE J1097 and ISO 10567 Hydraulic Excavator Lifting Capacity Standards.
3. Rated loads do not exceed 87% of hydraulic lifting capacity or 75% of tipping load.
4. Rated loads marked with an asterisk (*) are limited by hydraulic capacity rather than tipping load.

Specifications

LIFTING CAPACITY - ECR355ENL

At the arm end without bucket.
For Lifting capacity including bucket. simply subtract actual weight of the direct fit bucket or the bucket with quick fit from the following values.
Unit: 1 000 kg.

		Lifting point	1.5 m		3 m		4.5 m		6.0 m		7.5 m		9.0 m		Max. reach		
			Along UC	Across UC	Along UC	Across UC	Along UC	Across UC	Along UC	Across UC	Along UC	Across UC	Along UC	Across UC	Along UC	Across UC	Max. m
Boom :	6.2 m	9.0 m	-	-	-	-	-	-	-	-	-	-	-	-	*9.20	*9.20	4.72
Arm :	2.55 m	7.5 m	-	-	-	-	-	-	*8.40	*8.40	-	-	-	-	*8.48	*8.48	6.45
Shoe :	850 mm	6.0 m	-	-	-	-	*9.68	*9.68	*8.68	*8.68	-	-	-	-	*8.33	6.65	7.49
L/Frame:	NLC	4.5 m	-	-	-	-	*12.07	*12.07	*9.70	9.19	*8.59	6.54	-	-	*8.37	5.75	8.13
Dozer blade down		3.0 m	-	-	-	-	*15.01	13.38	*11.02	8.79	*9.18	6.36	-	-	*8.52	5.31	8.46
		1.5 m	-	-	-	-	*16.93	12.74	*12.15	8.45	*9.75	6.19	-	-	*8.74	5.17	8.51
		0.0 m	-	-	-	-	*17.29	12.53	*12.71	8.25	*10.04	6.07	-	-	*9.00	5.30	8.29
		-1.5 m	-	-	*12.21	*12.21	*16.61	12.53	*12.53	8.19	*9.74	6.05	-	-	*9.27	5.78	7.77
		-3.0 m	-	-	*19.63	*19.63	*14.92	12.68	*11.36	8.28	-	-	-	-	*9.45	6.88	6.89
		-4.5 m	-	-	-	-	*11.53	*11.53	-	-	-	-	-	-	*9.20	*9.20	5.47
Boom :	6.2 m	9.0 m	-	-	-	-	-	-	-	-	-	-	-	-	*6.84	*6.84	5.63
Arm :	3.05 m	7.5 m	-	-	-	-	-	-	*7.59	*7.59	-	-	-	-	*6.09	*6.09	7.13
Shoe :	850 mm	6.0 m	-	-	-	-	-	-	*8.00	*8.00	*7.69	6.74	-	-	*5.82	*5.82	8.09
L/Frame:	NLC	4.5 m	-	-	*15.71	*15.71	*11.00	*11.00	*9.08	*9.08	*8.12	6.60	-	-	*5.81	5.22	8.68
Dozer blade down		3.0 m	-	-	-	-	*13.99	13.63	*10.49	8.88	*8.80	6.40	-	-	*5.99	4.86	8.99
		1.5 m	-	-	-	-	*16.33	12.88	*11.77	8.50	*9.48	6.20	*6.78	4.76	*6.39	4.74	9.04
		0.0 m	-	-	-	-	*17.23	12.53	*12.54	8.25	*9.92	6.05	-	-	*7.09	4.83	8.83
		-1.5 m	-	-	*11.23	*11.23	*16.95	12.45	*12.62	8.15	*9.89	5.99	-	-	*8.30	5.20	8.35
		-3.0 m	-	-	*18.61	*18.61	*15.65	12.55	*11.84	8.18	*8.89	6.06	-	-	*8.82	6.03	7.53
		-4.5 m	-	-	*17.33	*17.33	*12.94	12.83	*9.46	8.41	-	-	-	-	*8.77	7.94	6.27
Boom :	6.2 m	9.0 m	-	-	-	-	-	-	*6.60	*6.60	-	-	-	-	*5.25	*5.25	6.57
Arm :	3.70 m	7.5 m	-	-	-	-	-	-	-	-	*6.02	*6.02	-	-	*4.76	*4.76	7.89
Shoe :	850 mm	6.0 m	-	-	-	-	-	-	*7.07	*7.07	*6.92	6.83	-	-	*4.57	*4.57	8.77
L/Frame:	NLC	4.5 m	-	-	-	-	*9.52	*9.52	*8.19	*8.19	*7.46	6.67	*6.01	4.96	*4.56	*4.56	9.32
Dozer blade down		3.0 m	-	-	-	-	*12.56	*12.56	*9.68	8.99	*8.23	6.44	*7.41	4.86	*4.68	4.38	9.60
		1.5 m	-	-	-	-	*15.30	13.05	*11.13	8.56	*9.04	6.20	*7.82	4.74	*4.96	4.27	9.65
		0.0 m	-	-	*6.60	*6.60	*16.81	12.53	*12.16	8.24	*9.65	6.01	*8.08	4.65	*5.44	4.33	9.45
		-1.5 m	*6.60	*6.60	*10.58	*10.58	*17.08	12.33	*12.56	8.07	*9.87	5.91	*6.27	4.61	*6.23	4.61	9.00
		-3.0 m	*11.07	*11.07	*15.95	*15.95	*16.29	12.35	*12.18	8.04	*9.44	5.91	-	-	*7.63	5.21	8.26
		-4.5 m	-	-	*19.85	*19.85	*14.29	12.55	*10.69	8.17	-	-	-	-	*8.33	6.49	7.13
		-6.0 m	-	-	-	-	*10.05	*10.05	-	-	-	-	-	-	-	-	5.35
Boom :	6.2 m 2 piece boom	9.0 m	-	-	-	-	*11.36	*11.36	-	-	-	-	-	-	*10.22	*10.22	4.83
Arm :	2.55 m	7.5 m	-	-	-	-	*11.52	*11.52	*10.60	9.66	-	-	-	-	*8.91	8.35	6.53
Shoe :	850 mm	6.0 m	-	-	-	-	*12.66	*12.66	*10.80	9.54	*9.00	6.61	-	-	*8.48	6.52	7.56
L/Frame:	NLC	4.5 m	-	-	-	-	*14.86	14.35	*11.53	9.18	*9.67	6.51	-	-	*8.48	5.64	8.20
Dozer blade down		3.0 m	-	-	-	-	*16.73	13.31	*12.31	8.75	*9.92	6.32	-	-	*8.72	5.20	8.52
		1.5 m	-	-	-	-	*16.29	12.63	*12.68	8.38	*9.97	6.13	-	-	*8.43	5.07	8.57
		0.0 m	-	-	-	-	*15.95	12.40	*12.27	8.17	*9.53	6.01	-	-	*8.06	5.20	8.35
		-1.5 m	-	-	*11.22	*11.22	*13.72	12.42	*10.91	8.12	*8.20	5.99	-	-	*7.45	5.67	7.84
		-3.0 m	-	-	-	-	*10.34	*10.34	*8.27	8.23	-	-	-	-	*6.28	*6.28	6.97
Boom :	6.2 m 2 piece boom	9.0 m	-	-	-	-	-	-	-	-	-	-	-	-	*7.02	*7.02	5.73
Arm :	3.05 m	7.5 m	-	-	-	-	-	-	*8.89	*8.89	-	-	-	-	*6.19	*6.19	7.21
Shoe :	850 mm	6.0 m	-	-	-	-	*9.24	*9.24	*9.68	9.68	*8.52	6.73	-	-	*5.88	5.81	8.16
L/Frame:	NLC	4.5 m	-	-	*20.63	*20.63	*14.04	*14.04	*11.08	9.31	*9.37	6.58	-	-	*5.82	5.11	8.75
Dozer blade down		3.0 m	-	-	-	-	*16.14	13.59	*12.00	8.85	*9.74	6.36	*6.47	4.80	*5.97	4.76	9.05
		1.5 m	-	-	-	-	*17.16	12.77	*12.57	8.44	*9.94	6.15	*7.37	4.71	*6.31	4.64	9.10
		0.0 m	-	-	-	-	*16.57	12.41	*12.45	8.17	*9.71	5.99	-	-	*6.93	4.74	8.89
		-1.5 m	-	-	*10.43	*10.43	*14.74	12.34	*11.43	8.07	*8.78	5.93	-	-	*7.05	5.10	8.41
		-3.0 m	-	-	-	-	*11.75	*11.75	*9.29	8.12	*6.44	6.02	-	-	*6.14	5.91	7.61
Boom :	6.2 m 2 piece boom	9.0 m	-	-	-	-	*6.92	*6.92	-	-	-	-	-	-	*6.78	*6.78	4.55
Arm :	3.70 m	7.5 m	-	-	-	-	-	-	*6.90	*6.90	-	-	-	-	*5.38	*5.38	6.67
Shoe :	850 mm	6.0 m	-	-	-	-	-	-	*7.21	*7.21	*6.33	*6.33	-	-	*4.85	*4.85	7.98
L/Frame:	NLC	4.5 m	-	-	-	-	-	-	*7.53	*7.53	*7.39	6.84	-	-	*4.62	*4.62	8.85
Dozer blade down		3.0 m	-	-	*9.14	*9.14	*9.29	*9.29	*9.12	*9.12	*8.51	6.66	*6.33	4.94	*4.57	*4.57	9.39
		1.5 m	-	-	-	-	*15.15	13.95	*11.45	8.98	*9.39	6.41	*7.64	4.82	*4.67	4.28	9.68
		0.0 m	-	-	-	-	*16.77	12.97	*12.27	8.50	*9.76	6.16	*8.05	4.70	*4.91	4.17	9.72
		-1.5 m	-	-	*5.85	*5.85	*16.90	12.41	*12.48	8.16	*9.77	5.96	*7.78	4.60	*5.33	4.24	9.53
		-3.0 m	-	-	*9.87	*9.87	*15.68	12.21	*11.87	7.98	*9.21	5.85	*6.83	4.57	*6.04	4.52	9.08
		-4.5 m	-	-	*15.31	*15.31	*13.25	12.25	*10.26	7.97	*7.72	5.85	-	-	*6.02	5.11	8.34
		-6.0 m	-	-	-	-	*9.37	*9.37	*7.20	*7.20	-	-	-	-	-	-	7.22

Notes: 1. Machine in “Fine Mode-F” (Power Boost) for lifting capacities.
2. The above loads are in compliance with SAE J1097 and ISO 10567 Hydraulic Excavator Lifting Capacity Standards.
3. Rated loads do not exceed 87% of hydraulic lifting capacity or 75% of tipping load.
4. Rated loads marked with an asterisk (*) are limited by hydraulic capacity rather than tipping load.

Equipment

STANDARD EQUIPMENT
Engine
Turbocharged, 6 stroke diesel engine with water cooling, direct injection and charged air cooler that meets EU Stage V requirements
Air filter with indicator
Air intake heater
Fuel filter and water separator
Fuel filler pump: 50 l/min, with automatic shut-off
Alternator, 120 A
Electric / Electronic control system
Contronics
- Advanced mode control system
- Self-diagnostic system
Caretrack via GSM or satelite and 3yr-Caretrack subscription
Machine status indication
Engine speed sensing power control
Automatic idling system
One-touch power boost
Safety stop/start function
Adjustable LCD color monitor
Master electrical disconnect switch
Engine restart prevention circuit
High-capacity halogen or LED lights:
- Halogen: Frame-mounted 1, Boom-mounted 2
- LED: Frame-mounted 1, Boom-mounted 2
Batteries, 2 x 12 V / 170 Ah
Start motor, 24 V / 5.5 kW
Superstructure
Counterweight: 8 450kg
Access way with handrail
Tool storage area
Punched metal anti-slip plates
Undercovers (heavy duty)
Undercarriage
Undercovers
Hydraulic track adjusters
Greased and sealed track link
Standard track guard
Hydraulic system
Automatic sensing hydraulic system
- Summation system
- Boom priority
- Arm priority
- Swing priority
"ECO" mode fuel saving technology
Boom, arm amd bucket regeneration valves
Swing anti-rebound valves
Boom and arm holding valves
Multi-stage filtering system
Cylinder cushioning
Cylinder contamination seals
Automatic two-speed travel motors
Hydraulic oil, longlife oil 46

STANDARD EQUIPMENT
Cab and interior
ROPS (ISO12117-2) certified cab with fixed hatch
Silicon oil and rubber mounts with spring
Control lock out lever
Travel pedals and hand levers
Adjustable operator seat and joystick control console
Control joysticks (4 switches each or 3 switches & 1 proportional)
Heater & air-conditioner, automatic
Flexible antenna
Radio with AUX, USB Jack and Bluetooth
Cab, all-weather sound suppressed, includes:
- Cup holders
- Seat belt
- Door locks
- Tinted and safety glass
- Floor mat
- Horn
- Sun screens, front, roof, rear
- Large storage area
- Pull-up type front window
- Removable lower windshield
- Windshield wiper with intermittent feature
Side view camera
Rear view camera
Master key
Track shoes
600 mm with triple grousers
Digging Equipment
6.2 m mono boom
3.05 m arm
Linkage
Manual centralized lubrication
Service
Tool kit, daily maintenance

Equipment

OPTIONAL EQUIPMENT
Engine
Auto engine shutdown
Block heater 240 V
Diesel coolant heater, 10 kW
Water separator with heater
Tropical cooling system
Reversible cooling fan
Electric / Electronic control system
Extra work lights (Halogen / LED)
- Cab-mounted 3 (Front 2, Rear 1)
- Counterweight-mounted 1
Travel alarm
Anti-theft with code lock system
Rotating warning beacon
Undercarriage
Narrow Long Crawler
Full track guard
Dozer blade
700/800/850 mm with triple grousers
600 mm with double grousers
Hydraulic system
Boom float function with HRV
Hydraulic piping:
- Work tool management system (up to 20 programmable memories)
- Breaker & shear, 1 or 2 pump flow
- Slope/Rotator
- Extra for slope & rotator
- Grapple
- Quick coupler
- Oil leak (drain) line on base machine and boom
- Pressure pre-setting
Hydraulic oil, ISO VG 32,46
Hydraulic oil, longlife oil 68
Hydraulic oil, bio 46

OPTIONAL EQUIPMENT
Cab and interior
ROPS (ISO12117-2) certified cab with openable roof hatch
Fabric seat without heater
Fabric seat with heater and air suspension
Straight travel pedal
Cab-mounted falling object guard (FOG)
Cab-mounted falling object protective structure (FOPS)
Smoker kit (ashtray and lighter)
Anti vandal kit
Safety net for front window
Sun shield, roof hatch (steel)
Rain shield
Lower wiper
Volvo Smart View
One piece windshield (fixed hatch)
Digging Equipment
6.2 m 2-piece boom
2.55 m arm, 3.7 m arm
Linkage with lifting eye
Hydraulic quick fit
Volvo hydraulic quick coupler S2 with hook / S2 without hook
Volvo hydraulic quick coupler Universal U35
Volvo hydraulic steelwrist quick coupler S70
Service
Tool kit, compact
Spare parts kit
Other
Demolition package:
- Slew ring cover
- Boom cylinder protection
- Bucket cylinder protection
- Heavy Duty side door & hood with screen
Attachments
General Purpose bucket (GP)
Heavy Duty bucket
Tiltrotator Steelwrist

SELECTION OF VOLVO OPTIONAL EQUIPMENT

Narrow undercarriage

Two piece boom

Dozer blade

Reversible fan

Extra pedals (straight travel and X1)

Proportional joystick

Not all products are available in all markets. Under our policy of continuous improvement, we reserve the right to change specifications and design without prior notice. The illustrations do not necessarily show the standard version of the machine.

BIG ENOUGH TO TRUST
SMALL ENOUGH TO CARE

Founded in 1974 CJD Equipment are in the industry for the long term and have the skills and knowledge to support you and your equipment. CJD Equipment takes great pride in being Volvo CE's first and only authorised partner in Australia for over 25 years. Together, we provide a full range of machinery ideally suited to Australia's unique landscapes and industry requirements. These products are fully supported through a nationwide network of branches, and carefully selected dealers and service agents, strategically positioned to ensure total support.

With fully equipped and parts warehouses in every capital city, and dealers throughout major regional towns, we have the support network in place to ensure you're well supported, no matter where you or your machines are. Ongoing in-house training programs ensures our technicians' skills keep pace with the latest technology and product advances.

Head Office
54 Great Eastern Highway
South Guildford, WA 6055

Visit www.cjd.com.au
Call 1300 139 804
Email enquiries@cjd.com.au

Facebook.com/cjdequipment
Linkedin.com/company/cjd-equipment
Instagram.com/cjd_equipment

Reference Number: 20055418_B